CUBCRAFTERS

CARBON CUB SS
LIGHT SPORT

CC11-160 AIRCRAFT MAINTENANCE MANUAL

Applicable to CC11-00093 – CC11-00293

S/N: CC11-00XXX
Registration Number: NXXXXX

CUB CRAFTERS, INC.
1918 SOUTH 16TH AVENUE
YAKIMA, WASHINGTON 98903 USA

509-248-9491
877-484-7865

www.cubcrafters.com
support@cubcrafters.com

INTENTIONALLY LEFT BLANK

Record of Revisions

Rev.	Change	Date	Prepared By	Approved By
NC	Initial Issue	04/24/2009	SJH	SJH
A	List of Effective Pages updated. Revised Sections 1, 3, 4, 5.2, 5.3, 5.4.7, 5.4.8, 5.4.9, 5.4.10, 5.4.13, 5.4.14, 5.6, 6.1, 6.2, 6.3.1, 6.3.4, 6.3.5, 6.3.8, 6.3.10, 6.3.11, 6.3.12, 6.3.13, 6.3.14, 6.3.15, 6.3.16, 6.3.17, 6.3.18, 6.3.19, 6.3.23, 6.3.24, and 6.A.	10/28/2010	SJT	SJH
B	List of Effective Pages Updated. Added Section 5.4.15. Revised Sections: 6.3.5 and 6.A.	01/31/11	SJT	ECL
C	List of Effective Pages Updated. Revised Section 5.2. Revised Section 5.4.10. Revised Section 6.2. Corrected Section 11.3	05/02/11	SJT	ECL
D	List of Effective Pages Updated Revised Section 0, 1, 5.2, 5.4.10, 5.4.13, 6.3.1, 6.3.5, 6.3.10, 6.3.15, 6.3.16, 6.3.17, 6.4, and 6.5.	04/18/13	AMS	ECL
E	List of Effective Pages Updated. Revised Sections 0, 6.3.5, 6.3.6, 6.3.12, 6.3.13, 6.3.14, 6.3.15, 6.3.17, 6.3.19 and Appendix 6.A.	05/18/2023	MH	MRG

INTENTIONALLY LEFT BLANK

List of Effective Pages

Rev	Pages	Change	Date	Prepared By	Approved By
NC	All	Initial Issue	04/24/2009	SJH	SJH
A	1 Pg 1 3 Pg 1 5.2 Pg 3 Pg 4 Pg 7 Pg 8 5.3 Pg 3 Pg 4 5.4.7 Pg 2 5.4.8 Pg 2 5.4.9 Pg 2 5.4.10 Pg 2 Pg 3 5.4.13 Pg. ALL 5.4.14 Pgs ALL 5.6 Pg 2 6.1 Pg. ALL 6.2 Pg 3 Pg 4 6.3.1 Pg 2 6.3.4 Pgs 4-6 6.3.5 Pg 9 Pg 11 6.3.8 Pg 3 Pg 4 Pg 5 Pg 8 6.3.10 Pg 2 - 4 6.3.11 Pg 2 - 14 6.3.12 Pg 1 Pg 2 6.3.13 Pg 1 Pg 2 6.3.14 Pg 1 Pg 2 Pg 3 6.3.15 Pg 2 Pg 4 6.3.16 Pg 3 6.3.17 Pg 7 Pg 8	Revised name to "Carbon Cub". Added "Part" to 1.a. Updated Figure 5.2.1. Revised to correct dimensions. Updated Engine Specs. Updated Torque Specs. Corrected reference to Appendix 6.A. Add Cowl Flaps to Cowl. Clarified Tire Options. Updated engine photo. Added optional single throttle. Added Extended Range Tanks option. Added Extended Range Schematic. Updated all Avionic Information. Added antenna locations. Added Ignition Backup Battery Information. Updated all schematics for Avionics, Intercoms, Dynon and Lighting Options. Updated Painting. Updated Authorization Table. Updated Table 6.2.1. Updated Engine Oil. Added Ignition Backup Battery. Updated Instructions. Added Warning Note. Corrected Reference to 6.3.22. Revised Figure 6.3.8.1. Revised disc thicknesses. Revised bolt and washer quantities. Revised PSI callout and Reference. Updated Troubleshooting chart for Engine does not start, rough running, and Note. Renamed 2.1 to Pin Vice Throttle Cable. Added 2.2 for Heavy Duty Throttle Cable. Updated Figure 6.3.12.1. Updated Figure 6.3.12.2. Revised wording in General Section. Corrected Reference callout. Updated cowl removal with inlet rings. Updated Figure 6.3.14.2. Added Figure 6.3.14.3 and Cowl Flap information. Added Figure 6.3.15.2. Updated Figure 6.3.15.3. Updated Catto Propeller torque value. Updated Main Battery section.	10/28/2010	SJT	SJH

	6.3.18 Pg 3 6.3.19 Pg 2 - 4 6.3.23 Pg 1-2 6.3.24 Pgs 2, 4-5 6.A Pg A1 Pg A2 Pg A3 Pg A4 Pg A6 Pg A7	Added Ignition Backup Battery section. Updated Electronic Ignition Information and Figure 6.3.18.1. Reformatted Sections to Landing and Taxi Lights, Incandescent NAV/Anti-Collision, and LED NAV/Anti-Collision. Added 3X3 Landing Gear Option. Added Table 6.3.23.2. Added Propeller position for storage and mooring. Revised Engine Reference. Added Cowl Flaps. Revised Spark Plug options. Updated Engine Baffle information. Updated Seat Belt Information. Added Ignition Backup Battery. Added AOSS. Added Safety Alert, Service Bulletin, and Instruction.			
B	5.4.15 All 6.3.5 Pg 7 6.A Pg A4	Added Seat Section. Added missing Figure Label. Revised "Cabin" portion of Inspection Form.	01/31/2011	SJT	ECL
C	5.2 Pg 7 5.4.10 Pg 2 6.2 Pg 3 11 Pg 2	Revised Engine Specifications and Data Oil Sump Capacity. Revised Extended Range Fuel Tanks to 20.0 Gallons usable. Revised Table 6.2.1 for Dual Tank Usable Fuel and Oil Capacity. Corrected Typo in 11.3	05/02/2011	SJT	ECL
D	0 Pg viii Pg All 1 Pg 1 Pg 3 Pg 5 Pg All 5.2 Pg 7 5.2 Pg All 5.4.10 Pg 2 Pgs 4-5 Pg All 5.4.13 Pg 3 Pg 4 Pg 5 Pg All 6.3.1 Pg 1 Pg 2 Pg All 6.3.5 Pg 11 Pg All 6.3.10 Pg 5 Pg All 6.3.15 Pg 2	Added 6.5.2 to Table of Contents. Revision Date Updated Added Owner Responsibility Information. Added Safety/Maintenance Information. Added Change of Address/Owner Form. Added Safety Reporting Form. Revision Date Updated. TBO time set. Revision Date Updated. Added additional drain information. Added schematics for additional drain. Revision Date Updated. Added Deluxe VFR II Panel image. Added MyPanel image. Added MyPanel information to table. Revision Date Updated. Air Box interval set. Added tail brace wire replacement. Revision Date Updated. Revised brace wire rigging instructions. Revision Date Updated. Added missing word “oil”. Revision Date Updated Added additional drain information.	04/18/2013	AMS	ECL

D	Pg 4 Pg All 6.3.16 Pg 3 Pg All 6.3.17 Pg 4 Pg 5 Pg All 6.4 Pg 3 Pg 7 Pgs 4-11 Pg All 6.5 Pg 1 Pg 2 Pg All	Added schematics for additional drain. Revision Date Updated. Revised step (c) for electronic ignition. Revision Date Updated. Added Hartzell starter image. Modified steps to replace lock washers. Revision Date Updated. Revised reference to current chapter. Added Fabric Rivet section. Updated figure numbers. Revision Date Updated. Added section 6.5.2 Added section for MRA information and inclusion of service documents in AMM. Revision Date Updated.	04/18/2013	AMS	ECL
E	0 Pg. All 6.3.5 Pg. All 6.3.6 Pg. All 6.3.12 Pg. 3 6.3.13 Pg. 3 6.3.14 Pg. 2-4 6.3.15 Pg. 8 6.3.17 Pg. 5 Pg. 6 Pg. 9 6.3.19 Pg. 4 6.A Pg. A3 Pg. A4 Pg. A5 Pg. A6	 Updated record of revisions. Updated list of effective pages. Added serial number effectivity. Updated tail wire rigging procedure. Updated tail wire figures. Updated flight control rigging procedures. Entire section re-organized. Added additional filter oil options. Corrected exhaust installation procedure. Added torque value. Corrected cowl removal and installation procedures. Updated figures. Revised carburetor inlet screen servicing. Added inspection requirement for starter. Added inspection requirement for alternator belt. Added note for installing forward interior panels. Removed navigation light warranty information. Added inspection requirement for alternator belt. Referenced manufacturer’s manual for ELT replacement intervals. Added inspection requirement for interior panels near rudder pedals. Added inspection requirement for horizontal stabilizers and referenced SB00018.	05/18/2023	MH	MRG

INTENTIONALLY LEFT BLANK

TABLE OF CONTENTS

1 SCOPE
2 REFERENCE DOCUMENTS
3 TERMINOLOGY
4 SIGNIFICANCE & USE
5 AIRCRAFT MAINTENANCE MANUAL
- 5.1 FORMAT & GUIDANCE FOR THE USE OF THIS MANUAL
  - 5.1.1 GENERAL
  - 5.1.2 LAYOUT OF THE MANUAL
  - 5.1.3 WARNINGS, CAUTION AND NOTES
  - 5.1.4 REVISION SERVICE
- 5.2 GENERAL: SPECIFICATIONS & DATA
  - 5.2.1 GENERAL
  - 5.2.2 EQUIPMENT LIST
  - 5.2.3 CONSUMABLE PARTS LISTS
  - 5.2.4 ENGINE SPECIFICATIONSAND DATA
  - 5.2.5 WEIGHT AND BALANCE DATA
  - 5.2.6 TIRE INFLATION
  - 5.2.7 APPROVED OILS AND CAPACITIES
  - 5.2.8 RECOMMENDED FASTENER TORQUES
  - 5.2.9 GENERAL SAFETY INFORMATION
  - 5.2.10 FLIGHT SAFETY REPORTING INSTRUCTIONS
- 5.3 PERIODIC & ANNUAL INSPECTION REQUIREMENTS
  - 5.3.1 GENERAL
  - 5.3.2 ANNUAL INSPECTION TASKS
  - 5.3.3 PERIODIC INSPECTION TASKS
- 5.4 MAINTENANCE, REPAIR & ALTERATIONS of PRIMARY STRUCTURES
  - 5.4.1 GENERAL
  - 5.4.2 FUSELAGE
  - 5.4.3 WINGS
  - 5.4.4 EMPENNAGE
  - 5.4.5 FLIGHT CONTROLS
  - 5.4.6 LANDING GEAR
  - 5.4.7 WHEEL & BRAKE ASSEMBLIES
  - 5.4.8 ENGINE MOUNT
  - 5.4.9 ENGINE
  - 5.4.10 FUEL SYSTEM
  - 5.4.11 PROPELLER
  - 5.4.12 UTILITY SYSTEMS
  - 5.4.13 AVIONICS AND INSTRUMENT SYSTEMS
  - 5.4.14 ELECTRICAL SYSTEMS
  - 5.4.15 SEATS
- 5.5 STRUCTURAL REPAIRS
  - 5.5.1 GENERAL
- 5.6 PAINTING & COATINGS
  - 5.6.1 GENERAL
  - 5.6.2 PAINTING

6 LINE MAINTENANCE, REPAIRS & ALTERATIONS
- 6.1 AUTHORIZATION TO PERFORM LINE MAINTENANCE, REPAIR, ALTERATIONS, AND INSPECTIONS
  - 6.1.1 AUTHORIZATION TO PERFORM LINE MAINTENANCE, REPAIR, ALTERATIONS, AND INSPECTIONS
  - 6.1.2 FAA AUTHORIZATION FOR PILOT/OWNER TO PERFORM LINE MAINTENANCE TASKS
- 6.2 LINE MAINTENANCE TASKS
  - 6.2.1 100-HOUR INSPECTION
  - 6.2.2 ANNUAL INSPECTION
  - 6.2.3 SERVICING OF FLUIDS
- 6.3 REMOVAL & REPLACEMENT OF COMPONENTS
  - 6.3.1 GENERAL
  - 6.3.2 JACKING AND LIFTING
  - 6.3.3 FUSELAGE
  - 6.3.4 WINGS
  - 6.3.5 EMPENNAGE
  - 6.3.6 FLIGHT CONTROLS
  - 6.3.7 LANDING GEAR
  - 6.3.8 WHEEL & BRAKE ASSEMBLIES
  - 6.3.9 ENGINE MOUNT
  - 6.3.10 ENGINE
  - 6.3.11 ENGINE CONTROLS
  - 6.3.12 AIR INDUCTION SYSTEMS
  - 6.3.13 EXHAUST SYSTEM
  - 6.3.14 ENGINE COWL
  - 6.3.15 FUEL SYSTEM
  - 6.3.16 PROPELLER
  - 6.3.17 ELECTRICAL POWER SYSTEMS
  - 6.3.18 POWERPLANT – IGNITION
  - 6.3.19 ELECTRICAL
  - 6.3.20 STALL WARNING SYSTEM
  - 6.3.21 HOSES AND LINES

6.3.22 LEVELING
6.3.23 WEIGHING
6.3.24 PARKING AND MOORING
6.4 REPAIR OF STRUCTURE & COMPONENTS
6.4.1 GENERAL
6.4.2 PATCHING OF HOLES IN FABRIC, METAL, OR COMPOSITE NON-STRUCTURAL COMPONENT
6.4.3 NON-STRUCTURAL SHEET METAL REPAIRS
6.4.4 NON-STRUCTURAL COMPOSITE MATERIALS REPAIRS
6.5 ALTERATIONS
6.5.1 COMPLIANCE WITH MANUFACTURER'S SERVICE DIRECTIVE
6.5.2 MAJOR REPAIRS AND/OR ALTERATIONS
6.A APPENDIX A
7 HEAVY MAINTENANCE, REPAIRS & ALTERATIONS
7.1 AUTHORIZATION TO PERFORM HEAVY MAINTENANCE, REPAIR, & ALTERATIONS
7.2 HEAVY MAINTENANCE TASKS
7.2.1 REMOVAL AND REPLACEMENT OF COMPONENTS
7.2.2 REPAIR OF COMPONENTS OR AIRCRAFT STRUCTURE
7.2.3 ALTERATIONS OF COMPONENTS OR AIRCRAFT STRUCTURE
8 OVERHAUL
8.1 AUTHORIZATION TO PERFORM OVERHAULS
8.2 OVERHAUL MANUAL for LSA or LSA COMPONENT
8.3 COMPONENTS PLANNED FOR OVERHAUL
8.3.1 ENGINE
8.3.2 PROPELLER
8.3.3 CARBURETOR
8.3.4 CARBURETOR AIR BOX
8.3.5 STARTERS, GENERATORS, AND ALTERNATORS
8.3.6 INSTRUMENTS
8.3.7 AVIONICS EQUIPMENT
8.3.8 OIL COOLER
9 MAJOR REPAIRS & ALTERATIONS
9.1 ALTERATIONS GENERAL
9.2 EVALUTION TO ASTM STANDARDS WITH PRODUCTION ACCEPTANCE SPECCIFICATIONS
9.3 ALTERATION AFFIDAVIT
9.4 WRITTEN INSTRUCTIONS & DIAGRAMS FOR CERTIFICATION
9.4.1 GROUND AND FLIGHT TEST PROGRAMS FOR VERIFICATION OF SAFE OPERATION
9.5 OWNER INFORMATION ON ALTERATION DOCUMENTATION FOR AIRCRAFT RECORDS
10 TASK-SPECIFIC TRAINING
10.1 CARBON CUB SS SPECIFIC TRAINING – GENERAL
10.2 TYPE-SPECIFIC TRAINING REQUIRED BY CUBCRAFTERS, INC.
10.2.1 CUBCRAFTERS CC340 OVERHAUL AND HEAVY MAINTENANCE COURSE
10.2.2 EAA SPORT AIR FABRIC COVERING COURSE
11 SAFETY DIRECTIVES COMPLIANCE
11.1 SAFETY DIRECTIVES FOR CONTINUED AIRWORTHINESS
11.2 TYPES OF SAFETY DIRECTIVES
11.3 MANDATORY SAFETY DIRECTIVES

1 SCOPE

1.1 General

This manual has been prepared by Cub Crafters, Inc. in accordance with the standards of ASTM F2483. The manual provides the practices for the servicing and the maintenance of Cub Crafters' CC11-160 Carbon Cub Light Sport Aircraft (LSA) and guidance for the qualifications necessary to perform the various levels of maintenance. It provides practices and guidance for servicing and maintenance that can be performed by a qualified pilot and owner, the preventive maintenance requirements of a 100-hour and an annual inspection, and the corrective line maintenance actions for the repairs, alterations, and the removal and re-installation of components.

The owner is reminded that it is her/his responsibility to ensure that Cub Crafters has the appropriate contact information so that flight safety and other important information can be communicated in a timely manner. Please use the form on Cub Crafters' website (www.cubcrafters.com) to register any changes in ownership or address. Alternatively, complete the form on page 3 and email, fax or mail to the address below:

E-mail:	support@cubcrafters.com
Fax:	509 248-1421
Address:	1918 South 16th Avenue Yakima WA 98903

Cub Crafters may also be contacted by telephone at (509) 248-9491.
(note that Cub Crafters is on US Pacific Time and office hours are from 8:00 am to 5:00 pm.)

Service Alerts, Service Bulletins and the latest versions of the Pilot's Operating Handbook and Maintenance Manual Supplements for this aircraft may be found on Cub Crafters' website (www.cubcrafters.com).

1.2 Safety of Flight and Service Difficulty Reporting

Please report any service difficulties or any other issue relating to flight safety directly to Cub Crafters using the form on the website. Alternatively complete the form on Page 5 and email or fax to the address in Section 1.1.

1.3 Pilot/Owner Servicing and Maintenance

This manual identifies servicing and maintenance actions, which can be performed by the owner/pilot, as, identified in ASTM F2483, and who holds a light sport aircraft pilot's certificate (or greater) and who may not have received any specific authorized Carbon Cub training. The maintenance actions authorized in this manual comply with the intent of FAA 14 CFR Part 43.3 with regard to preventive maintenance.

1.4 Preventive Maintenance

This manual identifies the Carbon Cub preventive maintenance tasks, which are to be accomplished by qualified personnel, and include the actions for the 100-hour inspection and the annual inspection.

1.5 Corrective Maintenance & Alterations

This manual identifies the line maintenance, minor repair, and minor alteration tasks that can be accomplished by a holder of an LSA repairman certificate with either an inspection or maintenance rating.

No heavy maintenance, major repairs, or major alterations, as outlined in ASTM F2483 Sections 7 through 9, or in this maintenance manual, are authorized at this time, for this Carbon Cub aircraft.

Any heavy maintenance, major repairs, or major alterations, as outlined in ASTM F2483 Sections 7 through 9, can only be performed by Cub Crafters, Inc. or only as provided by Cub Crafters' approved engineering data.

CHANGE OF ADDRESS/OWNERSHIP FORM

Aircraft Serial Number: CC11-	**Aircraft Registration Number:**
CURRENT OWNER (Last, First)	**NEW OWNER (Last, First)**
COMPANY/ORGANIZATION	**COMPANY/ORGANIZATION**
PREVIOUS ADDRESS Number and Street	**NEW ADDRESS** Number and Street
City	City
State/Province / Postal Code	State/Province / Postal Code
Country	Country
TELEPHONE NUMBER(S)	**TELEPHONE NUMBER(S)**
SIGNATURE	DATE

FOR CUB CRAFTERS' USE ONLY	
Change of Ownership/Address Log Number:	Date Received:

INTENTIONALLY LEFT BLANK

CONTINUED OPERATIONAL SAFETY REPORTING FORM

NAME (Last, First)		
COMPANY/ORGANIZATION		
ADDRESS Number and Street		
City		**AIRCRAFT MODEL**
		CC11-_____
State/Province	Postal Code	**AIRCRAFT SERIAL NUMBER**
		CC11-_____
Country		**AIRCRAFT REGISTRATION NUMBER**
TELEPHONE NUMBER(S)		
DESCRIPTION OF SAFETY OF FLIGHT ISSUE OR SIGNIFICANT SERVICE DIFFICULTY:		
SIGNATURE		DATE
FOR CUB CRAFTERS' USE ONLY		
COS Log Number:		Date Received:

INTENTIONALLY LEFT BLANK

2 REFERENCE DOCUMENTS

ASTM F2483 – Standard Practice for Maintenance and the Development of Maintenance Manuals for Light Sport Aircraft

ASTM F2245 – Specification for the Design and Performance of a light Sport Aircraft.

ASTM F2295 – Practice for Continued Operational Safety Monitoring of a Light Sport Aircraft

14 CFR Part 43 – Maintenance, Preventive Maintenance, Rebuilding, and Alteration

INTENTIONALLY LEFT BLANK

3 TERMINOLOGY

(1) DEFINITIONS

(a) LSA Airplane (Light Sport Aircraft Airplane) – a powered fixed wing aircraft designed per Specification F2245 that is manufactured and delivered ready to fly. The Light Sport Aircraft is also defined by 14 CFR Part 1.1

(b) Annual Condition Inspection – detailed inspection accomplished once a year on a LSA in accordance with instructions provided in the maintenance manual supplied with the aircraft. The purpose of the inspection is to look for any wear, corrosion, or damage that would cause an aircraft to not be in a condition for safe operation.

(c) A&P – airframe and powerplant mechanic as defined by 14 CFR Part 65 in the U.S. or equivalent certification in other countries.

(d) FAA – United States Federal Aviation Administration.

(e) Heavy Maintenance – any maintenance, inspection, repair, or alteration a manufacturer has designated that requires specialized training, equipment, or facilities.

(f) Line Maintenance – any repair, maintenance, scheduled checks, servicing, inspections, or alterations not considered heavy maintenance that is approved by the manufacturer and is specified in the manufacturer's maintenance manual.

(g) LSA Repairman Inspection – U.S. FAA certificated repairman (light sport aircraft) with an inspection rating, defined by 14 CFR Part 65, authorized to perform the annual condition inspection on experimental light sport aircraft, or an equivalent rating issued by other civil aviation authorities.

(h) Discussion – Experimental LSA do not require the individual performing maintenance to hold any FAA airman certificate in the U.S.

(i) LSA Repairman Maintenance – U.S. FAA certificated repairman (light sport aircraft) with a maintenance rating as defined by 14 CPR Part 65, authorized to perform line maintenance on aircraft certificated as special LSA aircraft. Authorized to perform the annual condition/100-hour inspection on an LSA, or an equivalent rating issued by other civil aviation authorities.

(j) Maintenance Manual(s) – manual provided by an LSA manufacturer or supplier that specifies all maintenance, repairs, and alterations authorized by the manufacturer.

(k) Major Repair, Alteration, or Maintenance – any repair, alteration, or maintenance for which instructions to complete the task excluded from the maintenance manual(s) supplied to the consumer are considered major.

(l) Manufacturer – any entity engaged in the production of an LSA or component used on an LSA.

(m) Minor Repair, Alteration, or Maintenance – any repair, alteration, or maintenance for which instructions provided for in the maintenance manual(s) supplied to the consumer of the product are considered minor.

(n) Overhaul – maintenance, inspection, repair, or alterations that are only to be accomplished by the original manufacturer or a facility approved by the original manufacturer of the product.

(o) Overhaul Facility – facility specifically authorized by the aircraft or component manufacturer to overhaul the product originally produced by that manufacturer.

(p) Repair Facility – facility specifically authorized by the aircraft or component manufacturer to "repair the product originally produced by that manufacturer.

(q) 14 CFR-Code of Federal Regulations Title 14 Aeronautics and Space also known as the "FARs" or Federal Aviation Regulations.

(r) 100-hour inspection – same as an annual condition inspection, except the interval of inspection is 100 h of operation instead of 12 calendar months. This inspection is utilized when the LSA is being used for commercial operations such as flight instruction or rental, or both.

(2) ACRONYMS

(a) POH – pilot operating handbook.

(b) LSA (Light Sport Aircraft)—used herein to refer to both LSA airplanes and LSA airplane kits.

4 SIGNIFICANCE AND USE

The purpose of this maintenance manual is to provide guidance to owners, mechanics, airports, regulatory officials, and aircraft and component manufacturers who may accomplish maintenance, repairs, and alterations on the Cub Crafters CC11-160 Carbon Cub Light Sport Aircraft.

INTENTIONALLY LEFT BLANK

CHAPTER
5

AIRCRAFT MAINTENANCE MANUAL

INTENTIONALLY LEFT BLANK

5 AIRCRAFT MAINTANENCE MANUAL

5.1 ..... FORMAT & GUIDANCE FOR THE USE OF THIS MANUAL
5.2 ..... GENERAL: SPECIFICATIONS & DATA
5.3 ..... PERIODIC & ANNUAL INSPECTION REQUIREMENTS
5.4 ..... MAINTENANCE, REPAIR & ALTERATIONS of PRIMARY STRUCTURES
5.5 ..... STRUCTURAL REPAIRS
5.6 ..... PAINTING & COATINGS

INTENTIONALLY LEFT BLANK

5.1 FORMAT & GUIDANCE FOR THE USE OF THIS MANUAL

TABLE OF CONTENTS

1 GENERAL 2
2 LAYOUT OF THE MANUAL 2
3 WARNINGS, CAUTION AND NOTES 2
4 REVISION SERVICE 3

1 GENERAL

Cub Crafters, Inc. prepared this aircraft maintenance manual. It contains the information that a trained mechanic will need to maintain the aircraft in an airworthy condition.

The Aircraft Maintenance Manual was prepared to meet the ASTM F2483 Standard Specification requirements. The format of the manual is designed to be familiar to most modern aircraft mechanics.

This maintenance manual does not reflect part numbers and cannot be used for ordering replacement parts.

The wiring schematics that have been included in the manual are for general information purposes only. Aircraft will have optional equipment for which there will be specific drawings that will either be included with the aircraft's documentation on delivery or be available from Cub Crafters, Inc.

2 LAYOUT OF THE MANUAL

This maintenance manual is divided into chapters. The chapter numbers appear at the foot of each page.

Each chapter contains its own table of contents. Where the systems are complex, the table of contents will be found in the sub chapter (as is the case of Chapter 6).

3 WARNINGS, CAUTION AND NOTES

WARNING
AN OPERATING PROCEDURE, PRACTICE, OR A CONDITION, WHICH, IF NOT CORRECTLY FOLLOWED OR REMEDIED, COULD RESULT IN SERIOUS PERSONAL INJURY OR LOSS OF LIFE.

CAUTION
An operating procedure, practice, or a condition, which, if not strictly observed or corrected, could result in destruction of, or damage to equipment.

NOTE
An operating procedure, practice, or condition,
which is important to emphasize.

4 REVISION SERVICE

The Maintenance Manual will be made available to aircraft owners and repair shops on a subscription basis. Revisions will be sent to registered subscribers as they become available.

Revisions may also be obtained by submitting a request to:

Cub Crafters, Inc.
Address:..... 1918 S. 16th Avenue
Yakima WA 98903
USA
Telephone: ..... (509) 248-9491
Telephone: ..... (877) 484-7865
Fax: ..... (509) 248-1421
Website:..... www.cubcrafters.com
Email:..... support@cubcrafters.com

INTENTIONALLY LEFT BLANK

5.2 GENERAL: SPECIFICATIONS AND DATA

TABLE OF CONTENTS

1. GENERAL 2
MAIN DIMENSIONS 4
(1) WINGS 4
(2) AILERONS 4
(3) FLAPS 4
(4) HORIZONTAL STABILIZER 4
(5) FIN AND RUDDER 4
(6) LANDING GEAR 4
(7) CONTROL SURFACE TRAVELS AND CABLE TENSION SETTINGS 5
2. EQUIPMENT LIST 6
3. PURCHASE PARTS SOURCE LISTS 7
3.1 Consumable or Frequently Replaced Items 7
4. ENGINE SPECIFICATIONS AND DATA 7
5. WEIGHT AND BALANCE DATA 8
6. TIRE INFLATION 8
7. APPROVED OILS AND CAPACITIES 8
8. RECOMMENDED FASTENER TORQUES 8
8.1 General Torque Values 8
8.2 Definitions 8
8.3 Torquing Requirement 8
8.4 Use of Torque Wrenches and Adapters 9
8.5 Torquing Patterns 10
8.6 Specific Torque Requirements 10
8.7 General Torque Values 11
9. GENERAL SAFETY INFORMATION 12
10. FLIGHT SAFETY REPORTING INSTRUCTIONS 13

1. GENERAL

The location of any point on the aircraft is identified in a three axis grid as follows (Reference Figure 5.2.1):

- FS - Fuselage Station is a horizontal reference designation starting in front of the nose of the airplane at a point 60 inches ahead of the wing leading edge.

- WL - Water Line is a vertical reference designation measured parallel to the ground from a point 38.53 inches below the center of the bolts that attach the landing gear to the fuselage.

- BL - Buttock Line is a horizontal reference designation starting at the airplane centerline. When the aircraft is viewed from above, the letters “L” and “R” indicates whether the point is to the left or the right of the centerline.

- WS - Wing Station is measured outboard from the center of the respective wing attachment bolt to the wing tip. The letters “L” and “R” designate left or right wing respectively.

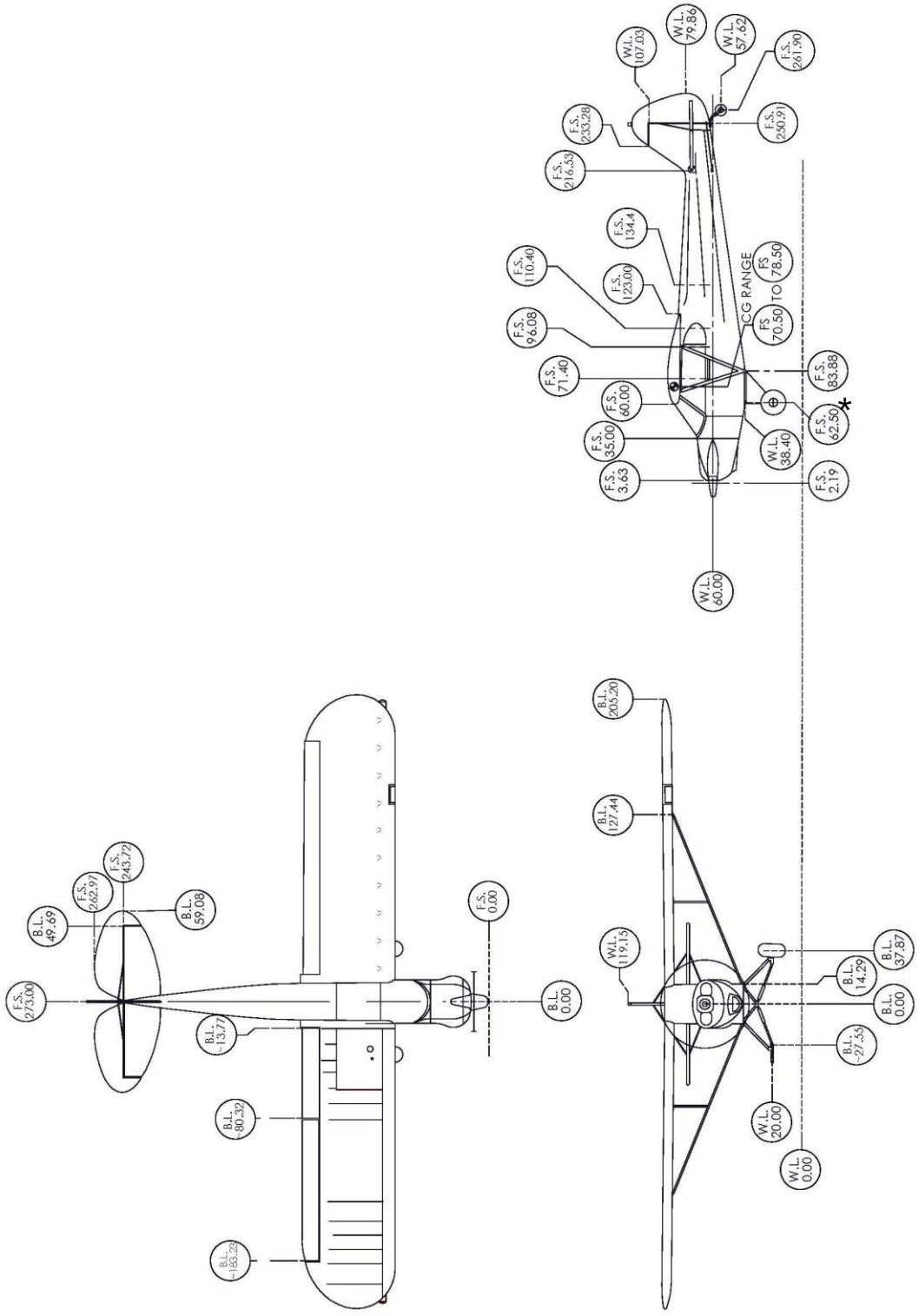

Figure 5.2.1: Aircraft Geometry
* - Optional 3X3 Landing Gear F.S. is 59.50

MAIN DIMENSIONS

Span	411 in.
Length (level flight attitude)	273 in.
Length (three point attitude)	290 in.
Height	111 in.
Height (tail wheel on ground, propeller blade vertical at top)*	84.5 in.
Propeller Ground Clearance*	23 in.
Design Gross Weight (Wheels)	1320 lbs
Seaplane/Amphibs	1430 lbs

*With Catto Propeller and 6.00x6 wheels

(1) WINGS

Type	Externally Braced, High Wing
Airfoil Section	USA 35B Mod at Root and Tip
Chord at Root	63 in.
Dihedral (measured on underside of front spar)	0.75°
Area	179 sq ft
Aspect Ratio	6.50

(2) AILERONS

Area (Both ailerons)	19.25 sq ft

(3) FLAPS

Area (Both flaps)	12.60 sq ft.

(4) HORIZONTAL STABILIZER

Span	118 in.
Maximum Chord	27 in.
Incidence (in neutral position)	-2.5°
Dihedral	0°
Area (including elevators)	14.10 sq ft.

(5) FIN AND RUDDER

Area	11.22 sq ft.

(6) LANDING GEAR

Wheel Track (main to main)	75.74 in.
Wheel Base (main to tail)	199.4 in.
Wheel Base with 3X3 (main to tail)	202.4 in.

(7) CONTROL SURFACE TRAVELS AND CABLE TENSION SETTINGS

(a) Aileron

Aileron Up ..... 18° ± 2°
Aileron Down ..... 18° ± 2°
Aileron Cable Tension..... 40 ± 5 lbs.

(b) Flaps

First Notch ..... 15° ± 3°
Second Notch ..... 35°± 3°
Third Notch ..... 50°± 3°

(c) Stabilizers

Neutral Setting ..... –2.5° relative to longitudinal axis
Stabilizers Up ..... 2.5° ±0.5°
Stabilizers Down ..... 4° ± 0.5°

(d) Elevators

Elevator Up ..... 25°± 2°
Elevator Down ..... 15°± 2°
Elevator Cable Tension..... 60 ± 2 lbs.

(e) Rudder

Rudder Left ..... 25° ± 2°
Rudder Right ..... 25° ± 2°

2. EQUIPMENT LIST

This section provides a list of components and equipment that the operator is likely to change on the aircraft.

Description	Ref. In AMM
6.00x6, 8.00x6, 8.50x6, 26”x6, 29”x6 main wheel and tires	5.4.6 or 6.3.7
Main landing gear without wheels and tires	5.4.6 or 6.3.7
Tail wheel with tire	5.4.6 or 6.3.7
Catto Propellers Wood/Fiberglass Composite	5.4.11 or 6.3.16

3. PURCHASE PARTS SOURCE LISTS

3.1 Consumable or Frequently Replaced Items

Description	Part Number (Reference purpose)	Source
Brake Fluid	MIL-H-5606G (Aeroshell #41)	Cub Crafters or Aircraft Parts Store
Air Filter	PC54108-001	Cub Crafters

4. ENGINE SPECIFICATIONS AND DATA

Engine Model	CC340
Number of Cylinders	4
Bore & Stroke	5.125 in x 4.125 in
Compression Ratio	8.9:1
Piston Displacement	340.4 in^3
Ignition Type	Dual Electronic
Rated Power at Sea Level < 5 minutes	180 HP @ 2700 RPM
Maximum Rated Continuous Power	80 HP (RPM dependant on altitude)
Minimum Idling Oil Pressure	25 psi
Maximum Oil Pressure	100 psi
Maximum Oil Temperature	245° F
Maximum Cylinder Head Temperature	475° F
Engine Weight – Dry	250 lb
Oil Sump Capacity	6 quarts maximum
Recommend TBO	2400 hours
Engine to Engine Frame Torque Value	60 in-lbs

Refer to CC340 Engine Manual for the operating limits.

5. WEIGHT AND BALANCE DATA

Refer to the Pilot's Operating Handbook and Airplane Flight Manual, SSC10000AFM, Section 6 for the Weight and Balance Data.

6. TIRE INFLATION

Refer to section 6.2.3 of this manual for the tire inflation data.

7. APPROVED OILS AND CAPACITIES

Refer to the POH or Section 6.2.3 of this manual for the approved oil and capacity data.

8. RECOMMENDED FASTENER TORQUES

8.1 General Torque Values

This chapter gives the requirements for torquing the fasteners.

No lubricating or anti-seize compounds are to be applied to threaded fasteners except when specified. At the time of installation, the threads must be clean and free of corrosion, paint or any products other than those applied by the fastener's manufacturer

8.2 Definitions

Running Torque: The average torque developed after the fastener is at least one full thread through the nut, but prior to the tightening of the joint (also called self-locking torque, locking torque, friction drag torque).

Assembly Torque: The torque required by design engineering in order to create the desired axial load on the bolt/nut assembly (also called tightening torque or installation torque).

8.3 Torquing Requirement

Whenever possible, the nut shall be turned during torquing.

Where it is necessary to tighten the fastener assembly from the head, the installation torque shall be the maximum torque indicated in Chapter 5.2.8.7 + 10 percent.

NOTE
This is only applicable for fasteners greater than 3/16" in diameter.

When nuts are to be secured to fasteners by means of cotter pins or lock wire, the low side of the specified torque range shall be approached for tightening. If necessary, tightening shall be continued until the next slot aligns with the hole.

Nuts shall not be loosened to obtain the required alignment.

The maximum torque shall not be exceeded.

Threaded fasteners which have been torqued above the maximum value specified **shall not** be backed off and re-torqued but shall be removed, rejected and rendered unserviceable.

If there is any doubt a fastener has been under-torqued, the nut shall be backed off one complete rotation (360°) maximum and retightened to the specified value; the bolt, screw or stud must not be allowed to rotate.

8.4 Use of Torque Wrenches and Adapters

All final torquing shall be carried out with certified torque wrenches or torque screwdrivers.

When adaptors or extensions are used on manually operated torque wrenches, they shall be aligned as shown in Figure 5.2.2 and the dial reading required shall be calculated from the following formula:

$$\text{Dial Reading} = \frac{\text{Specified Torque} \times L}{L+L_1}$$

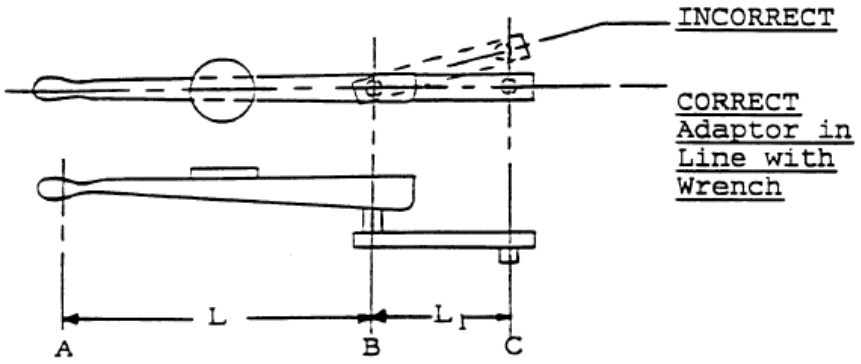

A = fulcrum point of handle

B = centre line of wrench drive

C = centre line of adaptor or extension drive

L = distance from fulcrum point of handle to centre line of wrench drive

L1 = distance from centre line of wrench drive to centre line of adaptor or extension drive

Figure 5.2.2: Use of Torque Wrenches

Dimensions must be measured in the same units (i.e. both in inches, both in feet, etc.) for each calculation. Different units must not be mixed.

8.5 Torquing Patterns

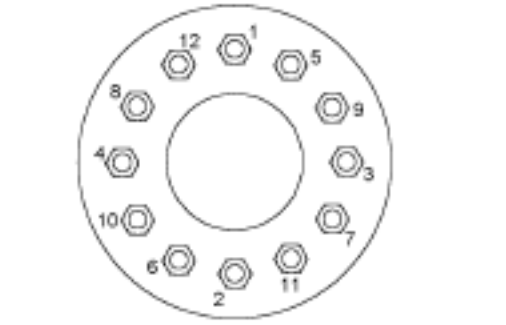

TYPICAL CIRCULAR PATTERN TORQUING SEQUENCE

TYPICAL LINEAR PATTERN TORQUING SEQUENCE

Figure 5.2.3: Torque Pattern

Whenever applicable, the following pattern must be followed when torquing fasteners:

8.6 Specific Torque Requirements

Item	Chapter/Section Reference	Torque Inch Pounds	Torque Foot Pounds
Catto Propeller	6.3.16	420	35
Spark Plugs	6.3.18	180	15

8.7 General Torque Values

BOLTS - STEEL TENSION	BOLTS - STEEL TENSION	BOLTS - ALUMINUM
AN3 THRU AN 20 AN42 THRU AN49 AN73 THRU AN81 AN173 THRU AN186 MS20033 THRU MS20046 MS20073 MS20074 AN509 MS24694 AN525 MS27039	MS20004 THRU MS20024 NAS 144 THRU NAS158 NAS333 THRU NAS340 NAS538 THRU NAS590 NAS624 THRU NAS644 NAS1303 THRU NAS1320 NAS172 NAS174 NAS517 **STEEL SHEAR BOLT** NAS464 NAS1103 NAS1104 NAS1105	AN3DD THRU AN20DD AN173DD THRU AN186DD AN509DD AN525D MS27039D MS24694DD

NUTS - STEEL		NUTS - STEEL		NUTS - ALUMINUM	
TENSION	SHEAR	TENSION	SHEAR	TENSION	SHEAR
AN363 AN365 NAS1021 MS21045 MS20365 MS20500 NAS679	AN364 MS20364 NAS1022 NAS1024-1030 NAS1067-1068 NAS680-687 NAS696-698	AN363 AN365 MS20365 MS21045 NAS1021 NAS1291 NAS679	AN364 NAS1022 MS20364	AN365D NAS1021D	AN364D NAS1022D

THREAD SIZE (FINE)	MIN.	MAX.	MIN.	MAX.	MIN.	MAX.	MIN.	MAX.	MIN.	MAX.	MIN.	MAX.
10-32	38	43	30	33	43	48	33	38	28	33	23	28
1/4-28	80	100	60	70	110	130	80	90	60	75	45	60
5/16-24	160	200	120	145	180	205	130	150	100	125	85	100
3/8-24	240	270	175	190	280	330	200	230	155	190	125	150
7/16-20	550	600	370	400	620	730	400	500	280	380	210	270

THREAD SIZE (COARSE)	MIN.	MAX.	MIN.	MAX.
8-32	27	30	22	24
10-32	38	43	30	33
1/4-20	70	80	55	60
5/16-18	140	150	108	115
3/8-16	240	265	175	190
7/16-14	335	355	240	255

Table 5.2.1: Torque Values (Friction drag torque already included)

9. GENERAL SAFETY INFORMATION

There are many hazards inherently present when performing any maintenance task on this aircraft. To minimize the risk to both yourself and others, begin by thinking through each task that is to be performed before starting any work. Using common sense, think of ways to avoid these hazards. Remember also that many accidents happen because of carelessness. Be sure to also use the right tool for the task at hand and to use the proper personal protective equipment. Such equipment may include, but is not limited to:

- Eye protection – safety glasses, goggles, and face shield
- Gloves
- Hearing protection – ear plugs or muffs
- Apron
- Protective footwear with non-slip soles

You should also keep on hand a suitable fire extinguisher, absorbent material to contain spills, an eyewash bottle, and a general-purpose first aid kit. It is also advisable to have on hand the material safety data sheet (MSDS) for all products and chemicals that will be used during the servicing of the aircraft.

Some other general rules to follow are:

- Never leave the ignition switch or the master switch turned on when the engine is not running. Doing so could allow the engine to fire if the propeller were rotated by hand.
- Never operate the engine with untrained personnel around – everyone who is essential to be in the area should be reminded that a spinning propeller may be lethal yet almost invisible. Remove hats when running the engine to keep them from being removed by the propeller slipstream.
- Remove any loose clothing, such as neckties and scarves. Tuck in your shirt and secure any long hair to prevent them from becoming tangled in power tools.
- Remove all jewelry. Not only can items such as rings, watches, and necklaces become caught in rotating tools, they can also conduct electricity and may cause a short circuit. This could result in burns or damage to electrical circuits.
- Disconnect the negative lead from the battery when doing any electrical work that does not involve troubleshooting the electrical systems. This will reduce the risk of a short circuit or even a fire.
- The lead acid battery will emit hydrogen gas when charging, which is highly flammable. Any nearby source of ignition such as sparks or an open flame can result in an explosion. Keep all ignition sources away from the battery.
- Aviation gasoline is also highly flammable. When working with the fuel system, always work in a well-ventilated environment. Any nearby source of ignition such as sparks or an open flame can result in a fire or explosion. Keep all ignition sources away. Always ground the airframe to a suitable earth ground during fueling/defueling operations to reduce the risk of a static discharge ignition source.
- When working with the landing gear, always support the aircraft properly with jacks. Do not work underneath the aircraft unless it is properly supported.

10. FLIGHT SAFETY REPORTING INSTRUCTIONS

The owner is reminded that it is her/his responsibility to ensure that Cub Crafters has the appropriate contact information so that flight safety information can be communicated in a timely manner.

Please report any service difficulties or any other issue relating to flight safety directly to Cub Crafters using the forms on the website or in Section 1.2 of this manual.

www.cubcrafters.com

The information may also be sent by e-mail to:
support@cubcrafters.com
or by telephone to
509 248-9491
(note that Cub Crafters is on US Pacific Time and office hours are from 8:00 am to 5:00 pm)

INTENTIONALLY LEFT BLANK

5.3 PERIODIC AND CONDITION INSPECTION REQUIREMENTS

TABLE OF CONTENTS

1. GENERAL 2
(1) VISUAL INSPECTION 2
(2) OPERATIONAL INSPECTION 3
(3) FUNCTIONAL INSPECTION 3
2. CONDITION INSPECTION TASKS 5
3. PERIODIC INSPECTION TASKS 5

1. GENERAL

This section is intended to serve as a guide for a certified airframe and powerplant mechanic to perform routine maintenance on the aircraft. It is the responsibility of the owner and/or the operator to maintain the aircraft in an airworthy condition and ensure that all applicable Safety Directives, Safety Alerts, and Service Bulletins have been complied with. Furthermore, it is the responsibility of the owner and/or the operator to ensure that the airplane is inspected as specified in Parts 43 and 91 of the Federal Aviation Regulations. This inspection guide is not intended to replace the good judgment of a certified airframe and powerplant mechanic.

The guide will make reference to service information provided by other vendors, such as the manufacturer of the engine. The persons performing the maintenance on the aircraft must ensure that they have the latest editions of these publications. This guide will not make reference to revision levels of vendor publications.

This guide will be applicable to the aircraft in the configuration it left Cub Crafters when it was first delivered and it may not cover modifications made to the aircraft subsequently.

Inspection Groups and Criteria

(1) VISUAL INSPECTION

Visual inspections will normally apply to those areas, surfaces, and/or items that become visible by the removal or opening of access doors, panels, fairings, or cowlings.

Visual Inspection criteria will normally consist of, but are not limited to the following criteria:

(A) Moving Parts

Proper operation, correct alignment, security, sealing, cleanliness, lubrication, adjustment, tension, travel, condition, binding, excessive wear, cracking, corrosion, deformation, and any other apparent damage.

(B) Fabric Covered Parts

Security, condition, cleanliness, wear, cracking, obstruction of drainage or vent holes, deformation, heat deterioration, fluid saturation, and any other apparent damage.

(C) Metal Parts

Security, condition of finish, cleanliness, distortion, fatigue cracks, cracked welds, corrosion, and any other apparent damage.

(D) Fuel and Hydraulic Oil Lines and Hoses

Cracks, dents, kinks, loss of flexibility, deterioration, obstruction, chaffing, improper bend radius, cleanliness, security, and any other apparent damage.

(E) Electrical Wiring

Cleanliness, loose, corroded, or broken terminals, chaffed, broken, or worn insulation; security; heat deterioration, and any other apparent damage.

(F) Bolts and Nuts

Fretting, wear, damage, stretch, proper torque and safety wiring.

(G) Filters and Screens

Filters and screens shall be removed, cleaned, inspected for contamination, or replaced as applicable.

(H) Fuel Tank Areas

Evidence of leaks

Inspection forms in Appendix 6.A may be used as a guidance to perform the visual inspection.

(2) OPERATIONAL INSPECTION

An operational inspection is a check intended to determine that a component or system is fulfilling its intended purpose. The operational inspection does not require quantitative tolerances.

(3) FUNCTIONAL INSPECTION

When called for by an inspection task, a functional inspection is a quantitative check to determine if one or more functions of a component perform within specified limits. The functional inspection is a comparative examination of a component or system against a specific standard.

NOTE

The operational and functional checks involve operating the engine and taxiing the aircraft. Therefore, whoever performs this check must be familiar with the aircraft and its systems and the risks and dangers of operating an aircraft on the ground. Attention is drawn to the fact that this aircraft has a tail wheel configuration and its behavior during taxiing is different from an aircraft with a nose gear. The operator must be familiar with taxiing a tailwheel aircraft before attempting to perform these checks.

During the check, observe engine temperatures limitations.

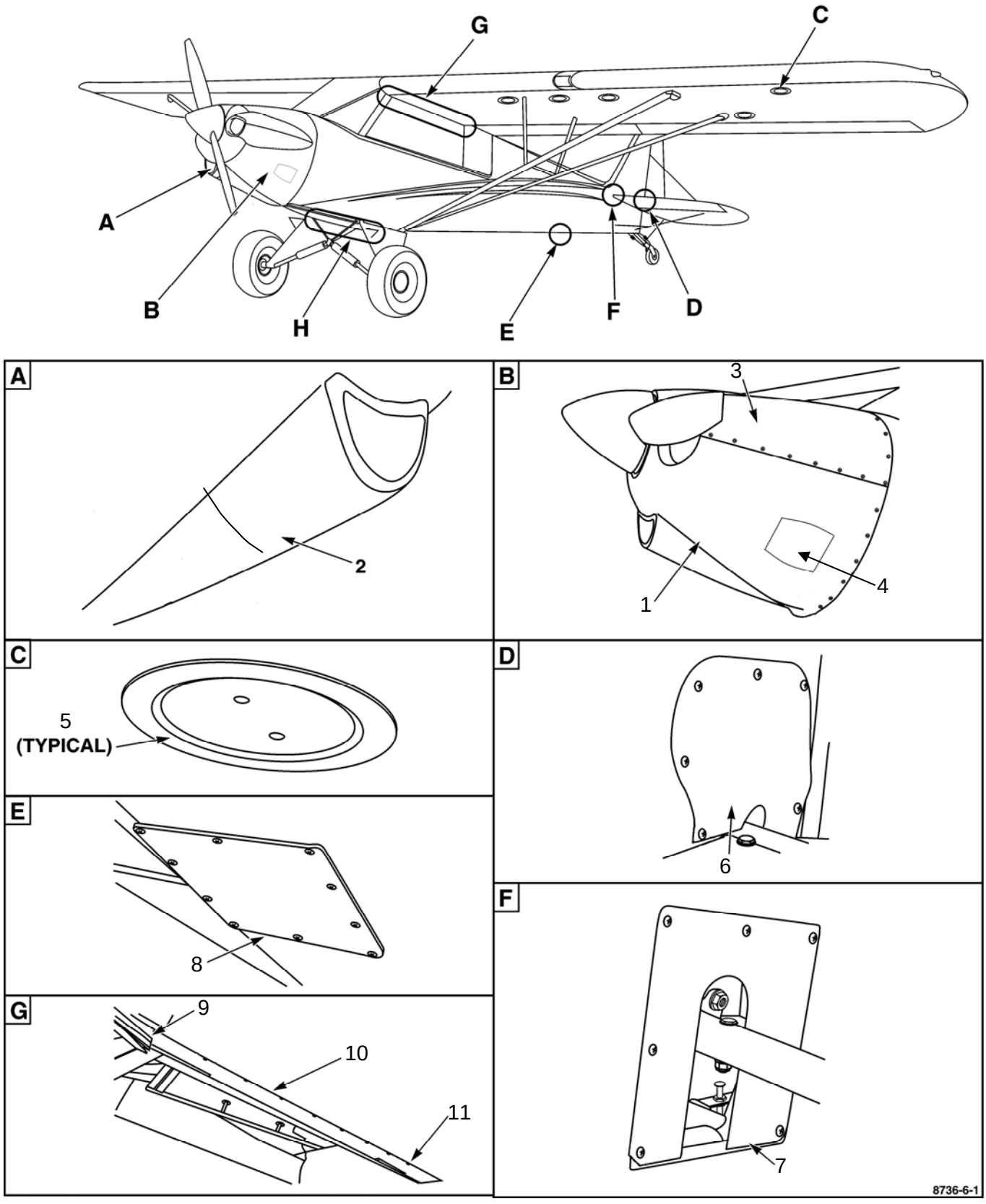
G
C
A
B
H
E
F
D
A
2
B
3
1
4
C
5
(TYPICAL)
D
6
E
8
F
7
G
9
10
11
8736-6-1

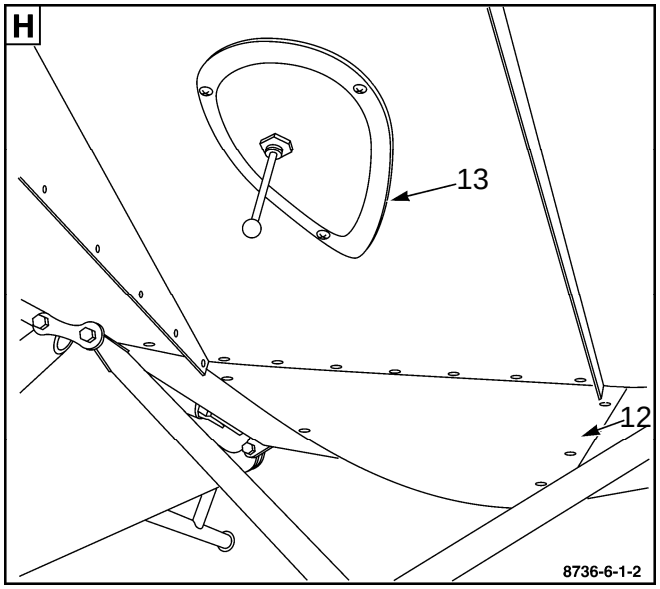

LEGEND:

1. **LOWER ENGINE COWLING**
2. **INSPECTION COVER**
3. **UPPER ENGINE COWLING**
4. **COWL FLAP (2)**
5. **INSPECTION RING (5 INCH) (9)**
6. **INSPECTION COVER (2)**
7. **INSPECTION COVER (2)**
8. **INSPECTION COVER (2)**
9. **WING TRIM EDGE (2)**
10. **WING TRIM STRIP (2)**
11. **WING TRIM END (2)**
12. **BELLY ELECTRICAL PANEL**
13. **ANTENNA MOUNT**

2. CONDITION INSPECTION TASKS

If the aircraft is registered in the United States, ASTM F2483 requires that all LSA category airplanes must undergo a complete inspection at least once every 12 calendar months. An authorized maintenance person, as described in ASTM F2483, must perform this inspection. A signed and dated record must be maintained as each inspection task is completed. When the last task of the inspection has been completed, the Inspection Report is to be signed off in the log book/maintenance record. The inspection items to be covered in the condition inspection are identical to the 100-hour Inspection items. The inspection interval to the next condition inspection may not exceed twelve calendar months. Refer to Appendix 6.A of this manual for the inspection forms.

3. PERIODIC INSPECTION TASKS

If the aircraft is operated commercially (for hire) in the United States, it must also have an inspection every 100 flight hours. The 100-hour interval between inspections should never be exceeded by more than 10 hours, and then only if additional time is required to reach a place where the inspection can be satisfactorily accomplished. Additionally, the time the interval was exceeded must be included as flight hours in the next 100-hour interval. Inspection tolerances cannot be accumulated. Refer to Appendix 6.A of this manual for the inspection forms.

INTENTIONALLY LEFT BLANK

5.4 LINE MAINTENANCE, REPAIRS, AND ALTERATIONS OF PRIMARY STRUCTURES

5.4.1 ..... GENERAL
5.4.2 ..... FUSELAGE
5.4.3 ..... WINGS
5.4.4 ..... EMPENNAGE
5.4.5 ..... FLIGHT CONTROLS
5.4.6 ..... LANDING GEAR
5.4.7 ..... WHEEL & BRAKE ASSEMBLIES
5.4.8 ..... ENGINE MOUNT
5.4.9 ..... ENGINE
5.4.10 ..... FUEL SYSTEM
5.4.11 ..... PROPELLER
5.4.12 ..... UTILITY SYSTEMS
5.4.13 ..... AVIONICS AND INSTRUMENT SYSTEMS
5.4.14 ..... ELECTRICAL SYSTEMS

INTENTIONALLY LEFT BLANK

5.4.1 GENERAL

No major repair or alterations, as outlined in ASTM F2483, FAR 43, or in this manual are authorized at this time.

To obtain engineering approvals for any major repairs or alterations, please contact Cub Crafters at:

Cub Crafters, Inc.
1918 South 16th Avenue
Yakima, WA. 98903
Tel: 509-248-9491
support@cubcrafters.com

INTENTIONALLY LEFT BLANK

5.4.2 FUSELAGE

TABLE OF CONTENTS

1 GENERAL....2
2 MAINTENANCE....2

1 GENERAL

The structure of the fuselage consists of a truss made of high-strength steel tubing. The members are joined together using inert gas fusion welding. The steel structure is powder coated to protect it from corrosion.

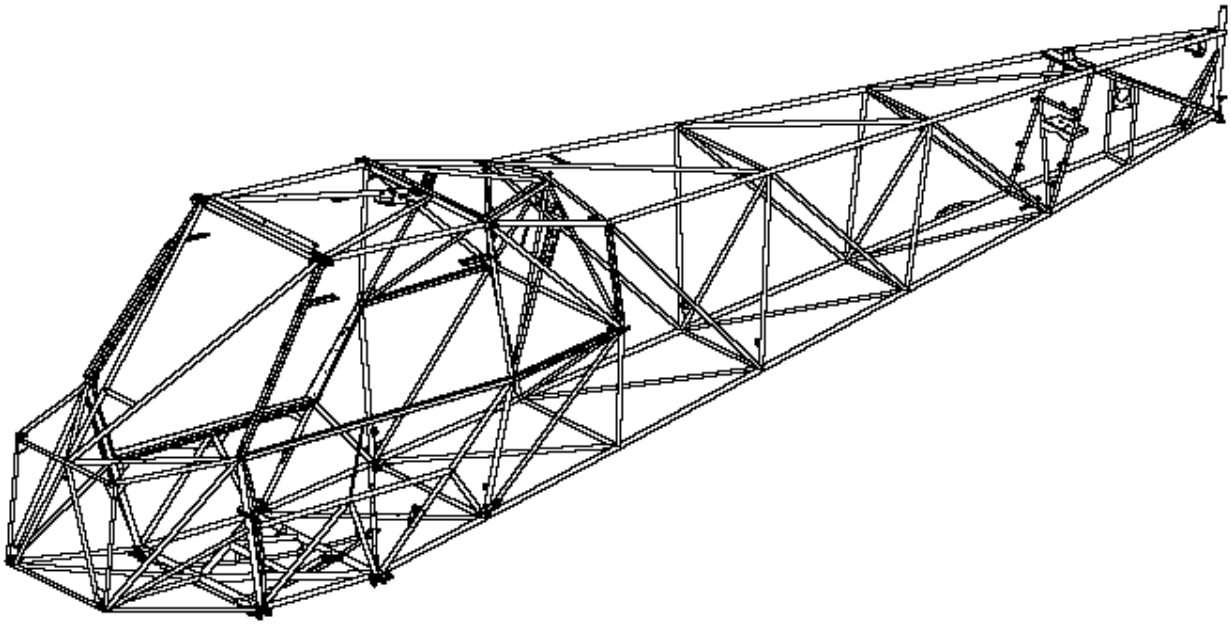

Figure 5.4.2.1: Fuselage Frame

2 MAINTENANCE

No major repair or alterations, as outlined in ASTM F2483, FAR 43, or in this manual are authorized at this time.

To obtain engineering approvals for any major repairs or alterations, please contact Cub Crafters at:

Cub Crafters, Inc.
1918 South 16th Avenue
Yakima, WA. 98903
Tel: 509-248-9491
support@cubcrafters.com

5.4.3 WINGS

TABLE OF CONTENTS

1. GENERAL....2
2. MAINTENANCE....2

1. GENERAL

The wing is covered with fabric, has two extruded aluminum spars, pressed aluminum ribs, and aluminum leading and trailing edge skins. Rigidity is provided by drag wires and drag braces. The left wing panel houses an optional landing light. A stall warning vane is installed on the leading edge of the left wing. The wing incorporates slotted wing flaps inboard of the ailerons.

2. MAINTENANCE

Refer to Section 6.3.4 for maintenance and servicing of the wings. No major repair or alterations, as outlined in ASTM F2483, FAR 43, or in this manual are authorized at this time.

To obtain engineering approvals for any major repairs or alterations, please contact Cub Crafters at:

Cub Crafters, Inc.
1918 South 16th Avenue
Yakima, WA. 98903
Tel: 509-248-9491
support@cubcrafters.com

5.4.4 EMPENNAGE

TABLE OF CONTENTS

1. GENERAL....2
2. MAINTENANCE....2

1. GENERAL

The stabilizers, elevators, and rudder are constructed of tubular steel with steel channel ribs. Stainless steel tie rods and fittings brace the horizontal stabilizers to the vertical stabilizer and fuselage.

The aircraft is trimmed in flight by changing the stabilizer's angle of incidence. The pitch trim is controlled by an electric servo, which moves the leading edge of the horizontal stabilizer up and down. The servo is actuated with a rocker switch located on the front control stick. Some aircraft are equipped with an aft control stick rocker switch.

2. MAINTENANCE

Refer to Section 6.3.5 for maintenance and servicing of the empennage. No major repair or alterations, as outlined in ASTM F2483, FAR 43, or in this manual are authorized at this time.

To obtain engineering approvals for any major repairs or alterations, please contact Cub Crafters at:

Cub Crafters, Inc.
1918 South 16th Avenue
Yakima, WA. 98903
Tel: 509-248-9491
support@cubcrafters.com

5.4.5 FLIGHT CONTROLS

TABLE OF CONTENTS

1. GENERAL....2
2. MAINTENANCE....2

1. GENERAL

The aircraft has conventional Friese-type ailerons that are operated with a stick and actuated with cables. The surfaces have an aluminum structure and are covered with aluminum sheet.

The flaps are operated mechanically by moving a lever located in the upper, left-hand side of the cockpit ahead of the pilot. The flaps are slotted and have four detent positions: retracted, first notch (15º), second notch (35º), and full flaps (50º). The flap lever has a spring latch system that holds the flap in the selected position. To extend the flaps, depress the trigger and then move the lever down. To retract them, depress the trigger while simultaneously applying a slight back pressure. Smoothly move the handle forward and release the trigger.

2. MAINTENANCE

Refer to Section 6.3.6 for maintenance and servicing of the flight control surfaces. No major repair or alterations, as outlined in ASTM F2483, FAR 43, or in this manual are authorized at this time.

To obtain engineering approvals for any major repairs or alterations, please contact Cub Crafters at:

Cub Crafters, Inc.
1918 South 16th Avenue
Yakima, WA. 98903
Tel: 509-248-9491
support@cubcrafters.com

5.4.6 LANDING GEAR

TABLE OF CONTENTS

1 GENERAL....2
2 MAINTENANCE....2

1 GENERAL

The conventional landing gear is fixed (i.e. not retractable) and has a tailwheel. The main landing gear has bungee type shock absorbers or the optional Alpha Omega Suspension System. The landing gear legs are made from welded high strength steel tubing. Both main wheels are fitted with hydraulically operated disc brakes, actuated by pressing toe brakes at each crew position. The tailwheel has leaf springs, is steerable, and has the ability to caster through 360º via the rudder pedals.

2 MAINTENANCE

Refer to Section 6.3.7 for maintenance and servicing of the landing gear. No major repair or alterations, as outlined in ASTM F2483, FAR 43, or in this manual are authorized at this time.

To obtain engineering approvals for any major repairs or alterations, please contact Cub Crafters at:

Cub Crafters, Inc.
1918 South 16th Avenue
Yakima, WA. 98903
Tel: 509-248-9491
support@cubcrafters.com

5.4.7 WHEEL AND BRAKE ASSEMBLIES

TABLE OF CONTENTS

1 GENERAL....2
2 MAINTENANCE....2

1 GENERAL

The main wheels are of aluminum construction and are designed to be used with tires and tubes. The approved tire sizes are 6.00 x 6, 8.00 x 6, 8.50 x 6, 26" Airstreak, and 29" Airstreak.

Each main wheel is provided with a set of single disc brakes. The left and right systems are independent of each other. There is a valve at the front of each rudder pedals that operate the parking brake. The units form an integral part with the copilot's rudder brakes. To operate the parking brake, press the upper section of both rudder pedals and toggle the valve (vertical is open, horizontal is locked). The master cylinders push hydraulic fluid to the calipers where two pistons are displaced and force the brake linings against a disc. Each main wheel utilizes a Grove 6.00x6 caliper, secured by a four-hole backing plate.

The tailwheel swivels through 360 degrees and is steerable via the rudder pedals. It is mounted to the fuselage with steel spring leafs.

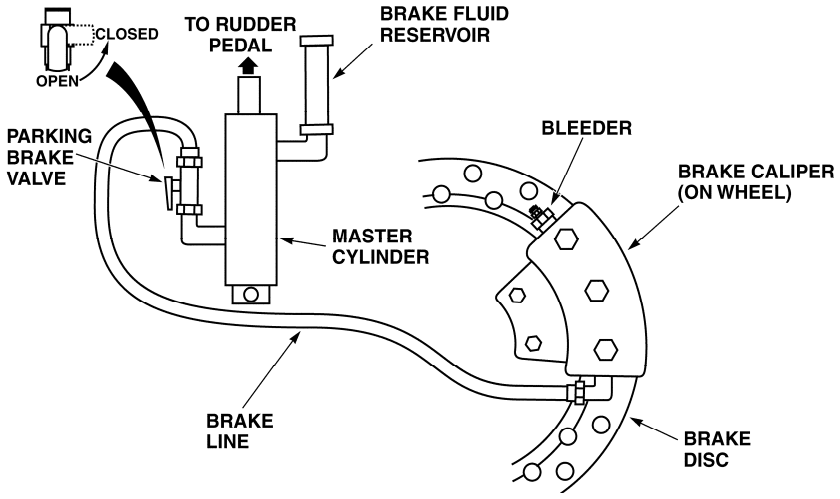

2 MAINTENANCE

Refer to Section 6.3.8 for maintenance and servicing of the wheel and brake assemblies. No major repair or alterations, as outlined in ASTM F2483, FAR 43, or in this manual are authorized at this time.

To obtain engineering approvals for any major repairs or alterations, please contact Cub Crafters at:

Cub Crafters, Inc.
1918 South 16th Avenue
Yakima, WA. 98903
Tel: 509-248-9491
support@cubcrafters.com

5.4.8 ENGINE MOUNT

TABLE OF CONTENTS

1 GENERAL....2
2 MAINTENANCE....2

1 GENERAL

The structure of the mount is made of high-strength steel and the engine is attached to the mount through rubber mounts that help reduce vibration.

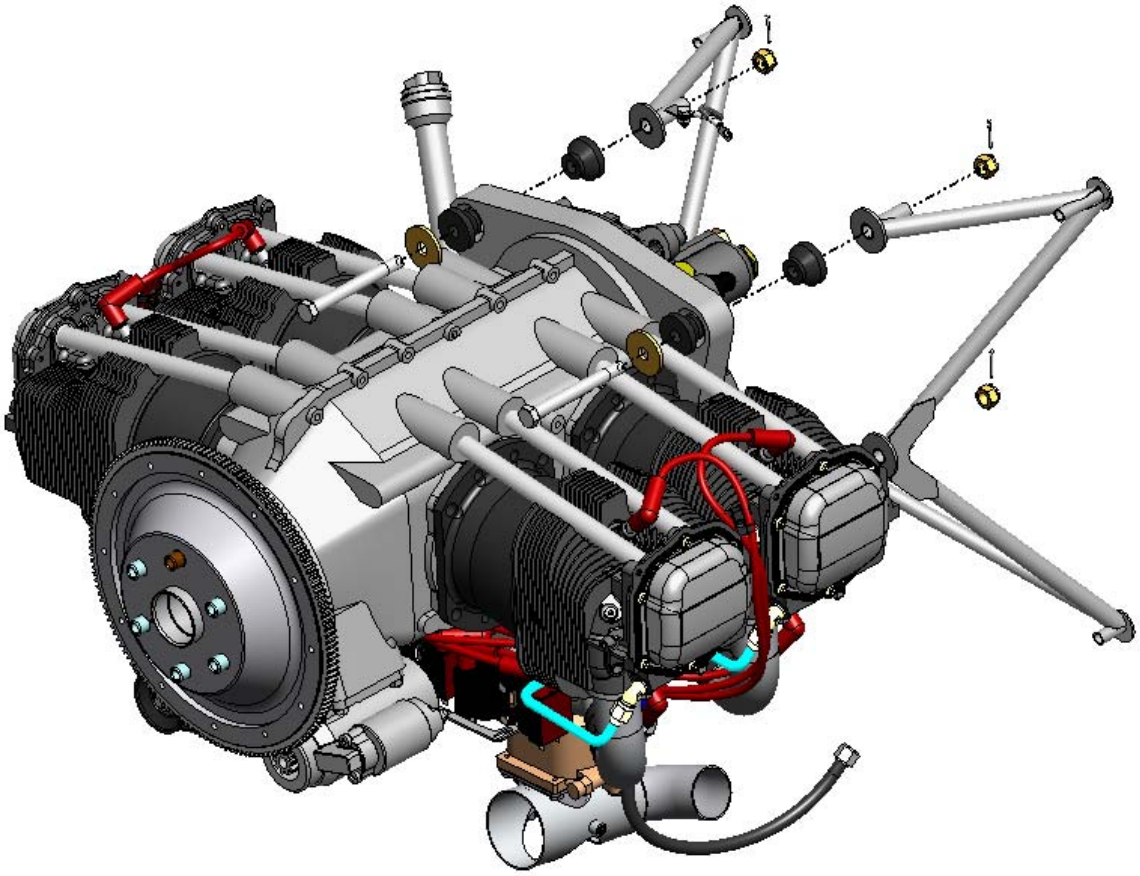

2 MAINTENANCE

No major repair or alterations, as outlined in ASTM F2483, FAR 43, or in this manual are authorized at this time.

To obtain engineering approvals for any major repairs or alterations, please contact Cub Crafters at:

Cub Crafters, Inc.
1918 South 16th Avenue
Yakima, WA. 98903
Tel: 509-248-9491
support@cubcrafters.com

5.4.9. ENGINE

TABLE OF CONTENTS

1 GENERAL....2
2 ENGINE MAINTENANCE....2

1 GENERAL

The aircraft is powered by a Cub Crafters, Inc CC340 engine. This is an air-cooled, four cylinder powerplant that is capable of delivering up to 180 hp at 2700 RPM for less than 5 minutes, and a constant 80 hp at given altitude and RPM settings.

A throttle controls power to the engine. There is a forward and aft throttle control on the left side of the cockpit. The aft throttle control is optional on some models. The air-to-fuel mixture is adjusted manually with a control on the left side of the instrument panel. Pulling the mixture control all the way back operates a cut-off valve on the carburetor that stops the supply of fuel to the engine. The mixture control should always be used to stop the engine.

2 ENGINE SERVICING

Refer to Section 6.3.10 and to CC340 Engine Manual by Cub Crafters, Inc. for servicing, maintenance, and overhaul of the engine.

3 ENGINE MAINTENANCE

No major repair or alterations, as outlined in ASTM F2483, FAR 43, or in this manual are authorized at this time.

To obtain engineering approvals for any major repairs or alterations, please contact Cub Crafters at:

Cub Crafters, Inc.
1918 South 16th Avenue
Yakima, WA. 98903
Tel: 509-248-9491
support@cubcrafters.com

5.4.10. FUEL SYSTEMS

TABLE OF CONTENTS

1. GENERAL..... 2
2 MAINTENANCE..... 3

1. GENERAL

The fuel system has a sump and drain located in the bottom right side of the fuselage aft of the door opening. Some aircraft have an additional sump and drain located on the bottom left side of the aircraft just aft of the firewall. These should be drained before each flight to test for water and sediment in the fuel system. The fuel system is a gravity flow system with no separate boost pump. Fuel drains from the wing tanks through a selector valve and fuel strainer to the carburetor.

Fuel may flow from one tank to the other when the selector is in either the OFF or the BOTH position. When parking the aircraft on a slope, leave the selector on either the left or the right position to prevent cross feeding and possibly overfilling the lower of the two tanks

There is an engine fuel primer system that may be used to start the engine, especially in cold conditions. The fuel primer draws fuel from the strainer by means of a hand-operated pump on the instrument panel and injects it into three cylinders for starting.

The fuel flows from the tanks into a selector valve that has four positions and is located on the lower, left side of the cockpit:

- Both - The engine is fed by both fuel tanks
- Left - Fuel is supplied by the left tank.
- Right - Fuel is supplied by the right tank.
- Off - Fuel supply to the engine is cut off.
- The engine may be operated in the Both, Left, or Right positions. However, the Both position is required for takeoff and landing.

Fuel quantity is determined with two sight gauges located on either side of the cockpit at the wing root. The ventilation of the tanks is through tubes located on each of the fuel tank caps. The vented caps should face forward.

Prior to refueling the aircraft, connect the fueling equipment's grounding wire to either of the wing tie downs or the engine exhaust pipe. This will ensure there is no electrical potential difference between the aircraft and the fueling equipment and will minimize the risk of electrical sparks when the aircraft is being refueled.

1. STANDARD FUEL TANKS

The aircraft is equipped with two tanks located on the inboard end of the wings. Each tank has a total capacity of 12.5 gallons for a total of 25 gallons. The total usable fuel is 24 gallons. The tanks are made of aluminum.

2. EXTENDED RANGE FUEL TANKS - OPTIONAL

The aircraft can be equipped with two interconnected tanks on the inboard end of each wing. Between the two tanks, they have a capacity of 22 gallons for a total of 44 gallons. The total usable fuel is 40 gallons. The tanks are made of aluminum.

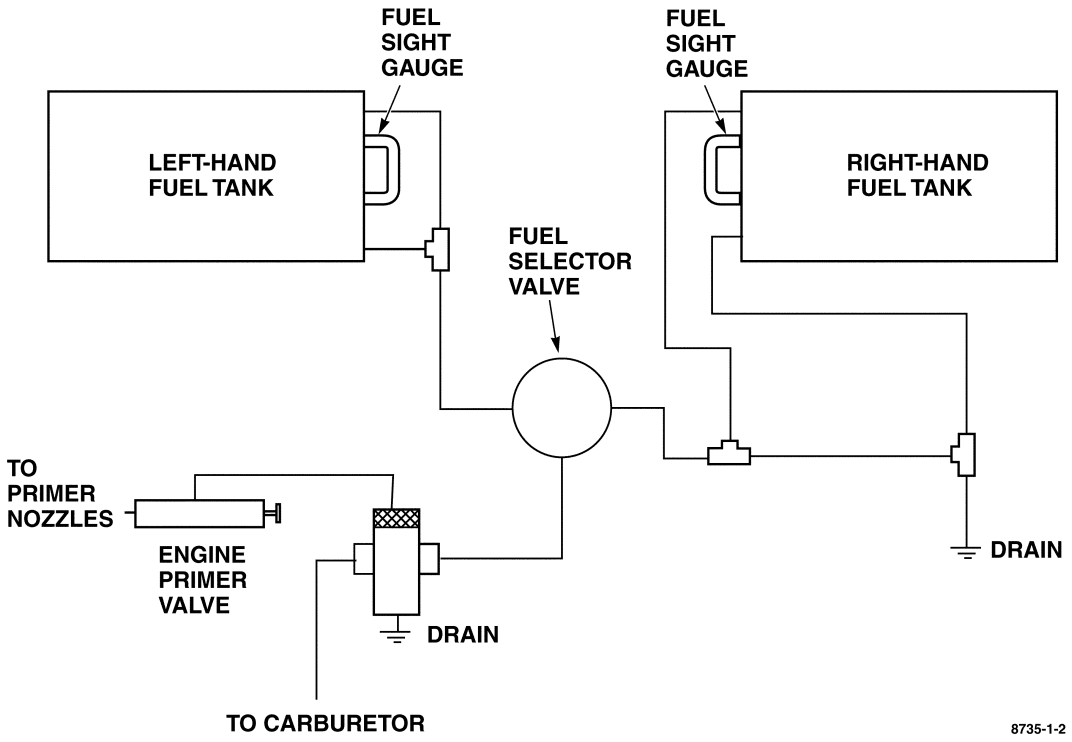

FIGURE 5.4.10.1 - STANDARD FUEL TANK CONFIGURATION

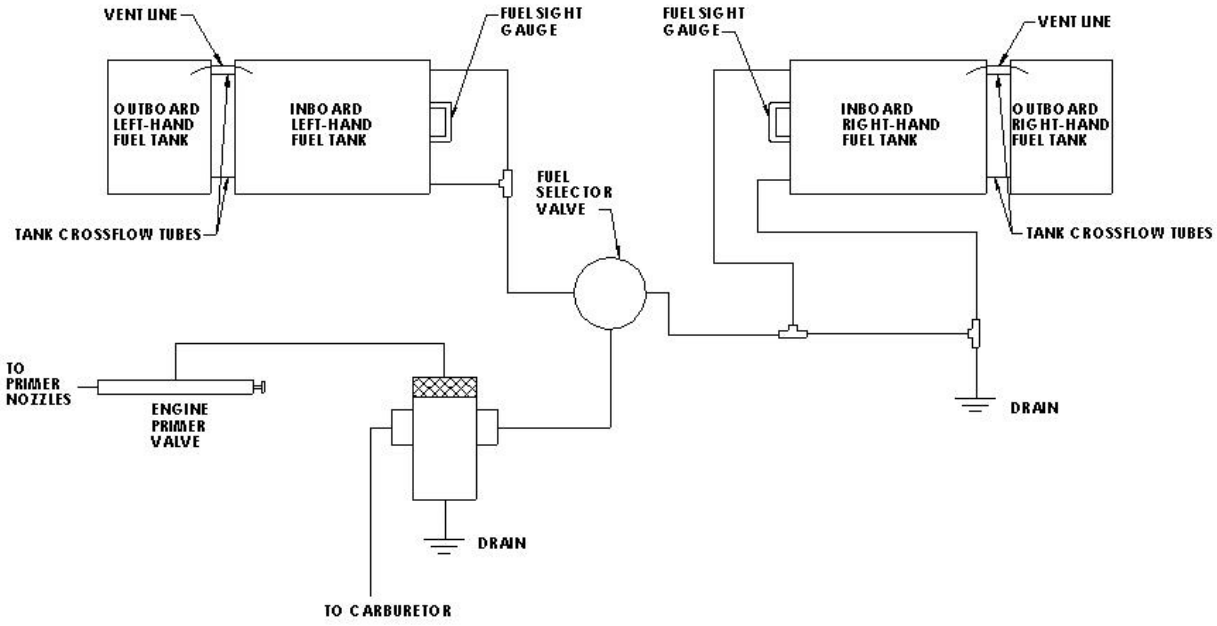

FIGURE 5.4.10.2 - OPTIONAL EXTENDED RANGE FUEL TANK CONFIGURATION

3. FUEL SYSTEM WITH ADDITIONAL DRAIN (S/N 00264 – AND ON)

Aircraft, starting with S/N 00264, have an additional sump and drain located on the bottom left side of the aircraft, just aft of the firewall on the boot cowl. The fuel system schematics for these aircraft are shown below.

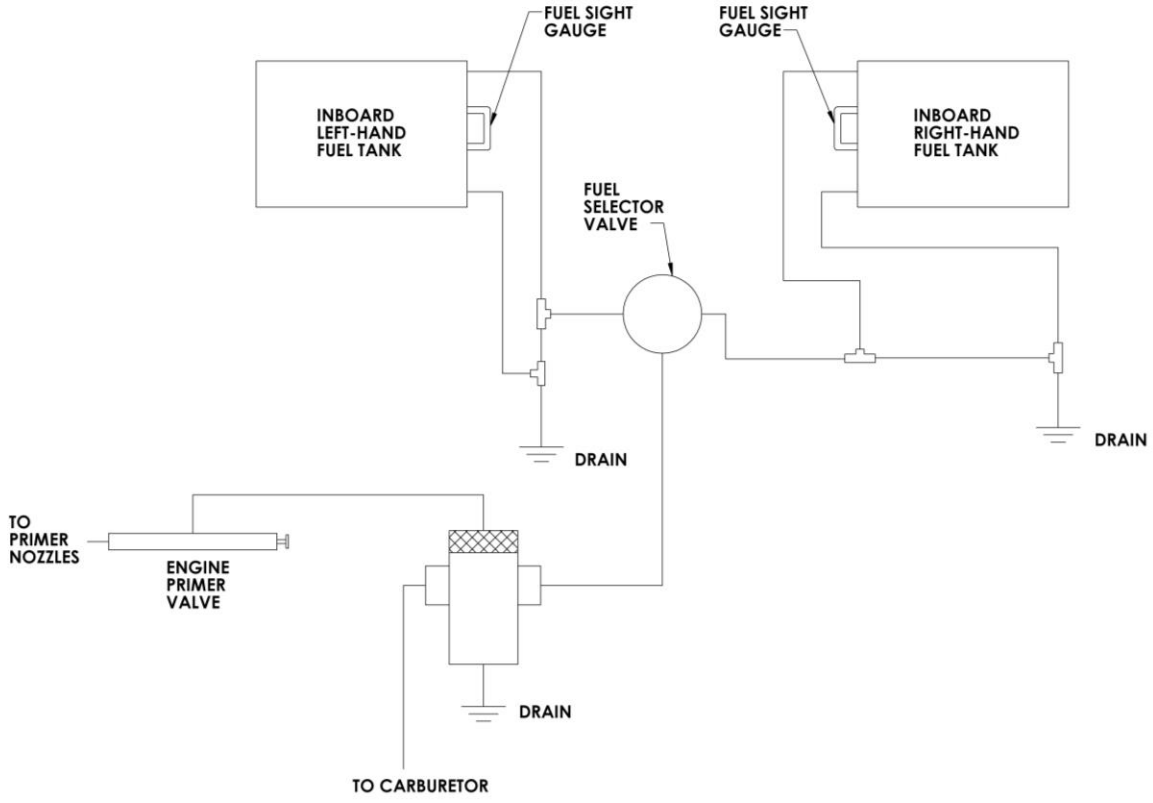

FIGURE 5.4.10.3 - STANDARD FUEL TANK CONFIGURATION WITH ADDITIONAL DRAIN

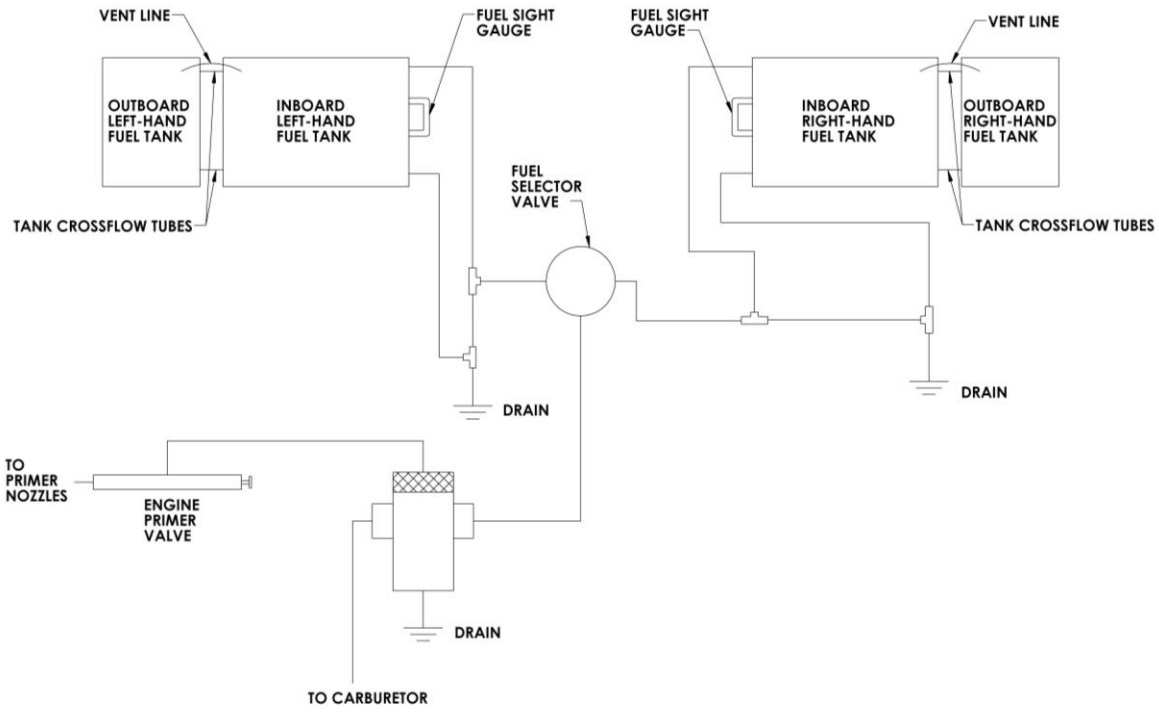

FIGURE 5.4.10.4 - OPTIONAL EXTENDED RANGE FUEL TANK CONFIGURATION WITH ADDITIONAL DRAIN

2 MAINTENANCE

Refer to Section 6.3.15 for the maintenance of fuel system. No major repair or alterations, as outlined in ASTM F2483, FAR 43, or in this manual are authorized at this time.

To obtain engineering approvals for any major repairs or alterations, please contact Cub Crafters at:

Cub Crafters, Inc.
1918 South 16th Avenue
Yakima, WA. 98903
Tel: 509-248-9491
support@cubcrafters.com

THIS PAGE INTENTIONALLY LEFT BLANK

5.4.11. PROPELLER

TABLE OF CONTENTS

1. GENERAL....2
2 MAINTENANCE....2

1. GENERAL

The standard aircraft comes with a Catto Propellers Wood/Fiberglass Composite Propeller.

2 MAINTENANCE

Refer to Section 6.3.16 or to the manufacturer's instructions for the maintenance of all propellers.

5.4.12. UTILITY SYSTEMS

TABLE OF CONTENTS

1. GENERAL....2
2 MAINTENANCE....2

1. GENERAL

The aircraft is equipped with a cabin heat system. Hot air for heating the cabin is supplied by a heat exchanger located around the engine exhaust. There is a small ram air scoop in the cowling inlet that provides air for the cabin heat system. Hot air enters the cabin through an opening on floorboard. To select the heater, the control on the upper right part of the instrument panel must be pulled aft.

2 MAINTENANCE

No major repair or alterations, as outlined in ASTM F2483, FAR 43, or in this manual are authorized at this time.

To obtain engineering approvals for any major repairs or alterations, please contact Cub Crafters at:

Cub Crafters, Inc.
1918 South 16th Avenue
Yakima, WA. 98903
Tel: 509-248-9491
support@cubcrafters.com

5.4.13 INSTRUMENTS AND AVIONICS SYSTEMS

TABLE OF CONTENTS

1 GENERAL 2
2 INSTRUMENTS 5
3 COM SYSTEM 6
3.1. Garmin SL40 COM 6
3.2. Becker COM 7
3.3. PM1200 Intercom 7
3.4. PM3000 Intercom 7
4 NAVIGATION SYSTEM 8
4.1. Garmin GTX 327 Transponder 8
4.2. Garmin GTX 330 Transponder 8
4.3. Becker Mode-C Transponder 9
4.4. Garmin GPS Options 9
4.5. D180 FlightDEK 10
5 ANTENNAS 11
5.1. Antenna Locations 11

1 GENERAL

The aircraft is equipped with an instrument panel containing all flight, navigation, and engine instruments that are required for VFR operations. Table 5.4.6 summarizes the equipment installed on the aircraft.

NOTE:
All instrument panel configurations shown with Right Ignition Backup Battery installed.

Figure 5.4.6.1: Standard Instrument Panel

Figure 5.4.6.2: Deluxe VFR Instrument Panel

Figure 5.4.6.3: Deluxe VFR II Instrument Panel

Figure 5.4.6.4: Performance VFR Instrument Panel

Figure 5.4.6.5: Deluxe Flat Instrument Panel

Figure 5.4.6.6: Executive Glass Instrument Panel

Figure 5.4.6.7: MyPanel Instrument Panel

INSTRUMENTS/GAUGES	AVIONICS SYSTEM
Standard Instrument Panel	
Tachometer	Garmin SL40 COM
Altimeter	SmartMonitor (S/N 00237 and on)
Air Speed Indicator	
Oil Pressure / Temperature Gauge	
Inclinometer (skid/slip indicator)	
Deluxe VFR Instrument Panel	
Tachometer	Garmin SL40 COM
Altimeter	Garmin GPS (495, 496, aera™ 550 or aera™ 560)
Airspeed Indicator	Garmin Transponder (GTX327 or GTX330)
Oil Pressure / Temperature Gauge	PM1200 Intercom (Optional)
Vertical Speed Indicator	SmartMonitor (S/N 00237 and on)
Turn and Bank Indicator	

INSTRUMENTS/GAUGES	AVIONICS SYSTEM
Performance VFR (II) Instrument Panel	
Airspeed Indicator	Becker COM
Digital Tachometer	Becker Transponder
Altimeter	Garmin GPS (695, 696, GDU370 or GDU375)
Inclinometer (skid/slip indicator)	PM1200 Intercom
Fuel Flow	SmartMonitor (S/N 00237 and on)
Vertical Speed Indicator	
Digital Oil Pressure/Temperature	
Deluxe Flat Instrument Panel	
Airspeed Indicator	Garmin SL40 COM
Clock	Garmin GPS (495 or 496)
Dynon D-180 EFIS and EMS	Garmin Transponder (GTX327 or GTX330)
SmartMonitor (S/N 00237 and on)	PM1200 Intercom (Optional)
Executive Glass Instrument Panel	
Airspeed Indicator	Garmin SL40 COM
Dynon D-180 EFIS and EMS	Garmin GPS (695, 696, GDU370 or GDU375)
SmartMonitor (S/N 00237 and on)	Garmin Transponder (GTX327 or GTX330)
	PM3000 Intercom
MyPanel Instrument Panel	
Airspeed Indicator	2 ¼" Round Radio
Digital Tachometer	2 ¼" Round Transponder
Altimeter	SmartMonitor (S/N 00237 and on)
Digital Oil Pressure/Temperature Gauge	

Table 5.4.6.1: Instrument and Avionics Equipment List

2 INSTRUMENTS

No major repair or alterations, as outlined in ASTM F2483, FAR 43, or in this manual are authorized at this time.

To obtain engineering approvals for any major repairs or alterations, please contact Cub Crafters at:

Cub Crafters, Inc.
1918 South 16th Avenue
Yakima, WA. 98903
Tel: 509-248-9491
support@cubcrafters.com

3 COM SYSTEM

No major repair or alterations, as outlined in ASTM F2483, FAR 43, or in this manual are authorized at this time.

To obtain engineering approvals for any major repairs or alterations, please contact Cub Crafters at:

Cub Crafters, Inc.
1918 South 16th Avenue
Yakima, WA. 98903
Tel: 509-248-9491
support@cubcrafters.com

3.1. Garmin SL40 COM

Garmin SL40 incorporates pilot friendly features such as active and standby flip-flop frequency tuning, direct sunlight-readable alphanumeric display, easy access to National Weather Service broadcasts, a two-place intercom, etc. Its frequency monitor function allows you to check ATIS or emergency frequencies – without leaving the assigned ATC channel.

3.2. Becker COM

The Becker AR 4201 is an extremely small and light-weight transceiver which offers 760 channels. A standby frequency and 99 memories can be easily programmed and recalled. The AR 4201 has an intercom, panel-lighting, voltage indicator, an AF-input as well as an automatic test-routine as standard functions. The clear, sunlight readable LCD display shows the active frequency and either the standby frequency, the memory channel used or the supply voltage.

3.3. PM1200 Intercom

The PM1200 is a two-place remote mount intercom designed to reduce noise that is picked up by the microphone, dynamically reducing the background noise heard in the headset when the VOX is opened.

3.4. PM3000 Intercom

The PM3000 is a two-place panel mount intercom designed allow the pilot and co-pilot/passenger to communicate and listen to great hi-fi stereo music.

4 NAVIGATION SYSTEM

No major repair or alterations, as outlined in ASTM F2483, FAR 43, or in this manual are authorized at this time.

To obtain engineering approvals for any major repairs or alterations, please contact Cub Crafters at:

Cub Crafters, Inc.
1918 South 16th Avenue
Yakima, WA. 98903
Tel: 509-248-9491
support@cubcrafters.com

4.1. Garmin GTX 327 Transponder

The GTX 327 is a solid-state Mode C digital transponder. It is TSO certified and its transmitter provides 200 watts nominal power output. The GTX 327 has a DSTN Liquid Crystal Display and a numeric keypad with a dedicated VFR code button. The GTX 327 also offers timing and display functions such as flight time and count-up and count-down timers, as well as current pressure altitude.

4.2. Garmin GTX 330 Transponder

The GTX 330 is a solid-state Mode C digital transponder. It is TSO certified, uses a DSTN Liquid Crystal Display and a numeric keypad with a dedicated VFR code button.

The GTX 330 is Mode S, IFR-certified with data link capability, including local traffic updates. The GTX 330 is able to receive FAA Traffic Information Services (TIS), including location, direction, altitude, and climb/descent information of nearby aircraft.

The GTX 330 also offers several timing and display functions: flight time, count-up and count down timers, and current pressure altitude. Other features include remote ident and auto standby, plus altitude monitor with voice alerting and an optional OAT (Outside Air Temperature) Probe.

NOTE
The GTX 330 meets the requirements of Level 2 Mode-S to satisfy the upcoming European Mode-S mandate for Elementary Surveillance.

4.3. Becker Mode-C Transponder

The Becker ATC 4401 has a sunlight readable display. In addition to the transponder code, the display shows the current flight level if an encoding altimeter is connected and Mode-C is selected. One button allows you to recall two preselected codes.

4.4. Garmin GPS Options

The Garmin GPSMAP 495/496 is an all-in-one, versatile navigation system. This portable GPS navigator features a 256-color TFT screen that is easy to read in bright sun, a built-in base map, and Jeppesen aviation database.

The Garmin aera™ 550/560 is easy-to-use with a 4.3 inch QVGA wide-format display with touchscreen interface. This portable GPS navigator features a high-resolution 9 arc-second terrain graphics. It is preloaded with SafeTaxi charts and AOPA Airport Directory.

The Garmin GPSMAP 695/696 is the ultimate portable MFD. This portable GPS navigator has a bright 7-inch diagonal high-definition sunlight readable display. You can quickly find and view all U.S. NACO departure procedures a built-in base map, and Jeppesen aviation database.

The Garmin GDU370/375 is an all-in-one, versatile navigation system. This GPS navigator features a 256-color TFT screen that is easy to read in bright sun, a built-in base map, and Jeppesen aviation database.

The 396, 496, 696, 560 or 375 GPS include an XM antenna and access, with a paid subscription, to XM WX Satellite weather. This allows pilots to have constant access to NEXRAF radar, lightning, METARs, TAFs, TFR, and more. In addition, these units offer XM Satellite Radio capabilities, featuring more than 150 digital channels of commercial free music; more than 30 channels of news, sports, talk and entertainment; and more than 20 dedicated channels of XM Instant Traffic and Weather.

4.5. D180 FlightDEK

The FlightDEK-D180 represents a brand new class of avionics that combines all EFIS and Engine Monitoring functions into a single, powerful instrument. The primary functions of EFIS includes attitude, airspeed, altitude, vertical speed, gyro-stabilized magnetic compass, slip/skid ball, turn rate, clock, timers and g-meter. The FlightDEK-D180's EMS replaces up to 16 different types of gauges. It continuously monitors up to 27 available sensor inputs that cover the engine, fuel and other miscellaneous systems and annunciate any abnormality immediately upon detection.

5 ANTENNAS

No major repair or alterations, as outlined in ASTM F2483, FAR 43, or in this manual are authorized at this time.

To obtain engineering approvals for any major repairs or alterations, please contact Cub Crafters at:

Cub Crafters, Inc.
1918 South 16th Avenue
Yakima, WA. 98903
Tel: 509-248-9491
support@cubcrafters.com

5.1. Antenna Locations

COM Antenna

The COM antenna is attached to the belly panel directly underneath the pilot on the underside of the aircraft.

Transponder Antenna

The transponder antenna is a 3" long antenna located directly in front of the COM antenna.

GPS Antenna

The GPS antenna is attached to the upper side of the front seatbelt mounting plate located under the skylight.

XM Antenna

The XM antenna is attached to the upper side of the front seatbelt mounting plate located under the skylight.

THIS PAGE INTENTIONALLY LEFT BLANK

5.4.14. ELECTRICAL SYSTEMS

TABLE OF CONTENTS

1. GENERAL....2
2 ELECTRICAL POWER SYSTEMS....2
(1) GENERAL....2
(2) SCHEMATICS....3
3 LIGHTING SYSTEMS....9
(1) GENERAL....9
(2) SCHEMATICS....9
4 EMERGENCY SYSTEMS: ELT....11
(1) GENERAL....11
(2) SCHEMATIC....11

1. GENERAL

Refer to Chapters 6.3.17 and 6.3.19 for servicing of the electrical systems. No major repair or alterations, as outlined in ASTM F2483, FAR 43, or in this manual are authorized at this time.

To obtain engineering approvals for any major repairs or alterations, please contact Cub Crafters at:

Cub Crafters, Inc.
1918 South 16th Avenue
Yakima, WA. 98903
Tel: 509-248-9491
support@cubcrafters.com

2 ELECTRICAL POWER SYSTEMS

(1) GENERAL

The aircraft uses a 14 volt DC electrical system with the power supplied by a 40 amp belt-driven alternator and a 12 volt storage battery. Some aircraft are equipped with a 12 volt ignition battery backup.

In addition to the alternator and the battery, the electrical system consists of a solid-state linear regulator, master and starter solenoids, circuit breakers, and switches. The battery is located underneath the pilot's seat. If installed, the Ignition Backup Battery is located behind the right front interior panel. Refer to Chapter 6.3.19 for the maintenance of electrical power systems.

(2) SCHEMATICS

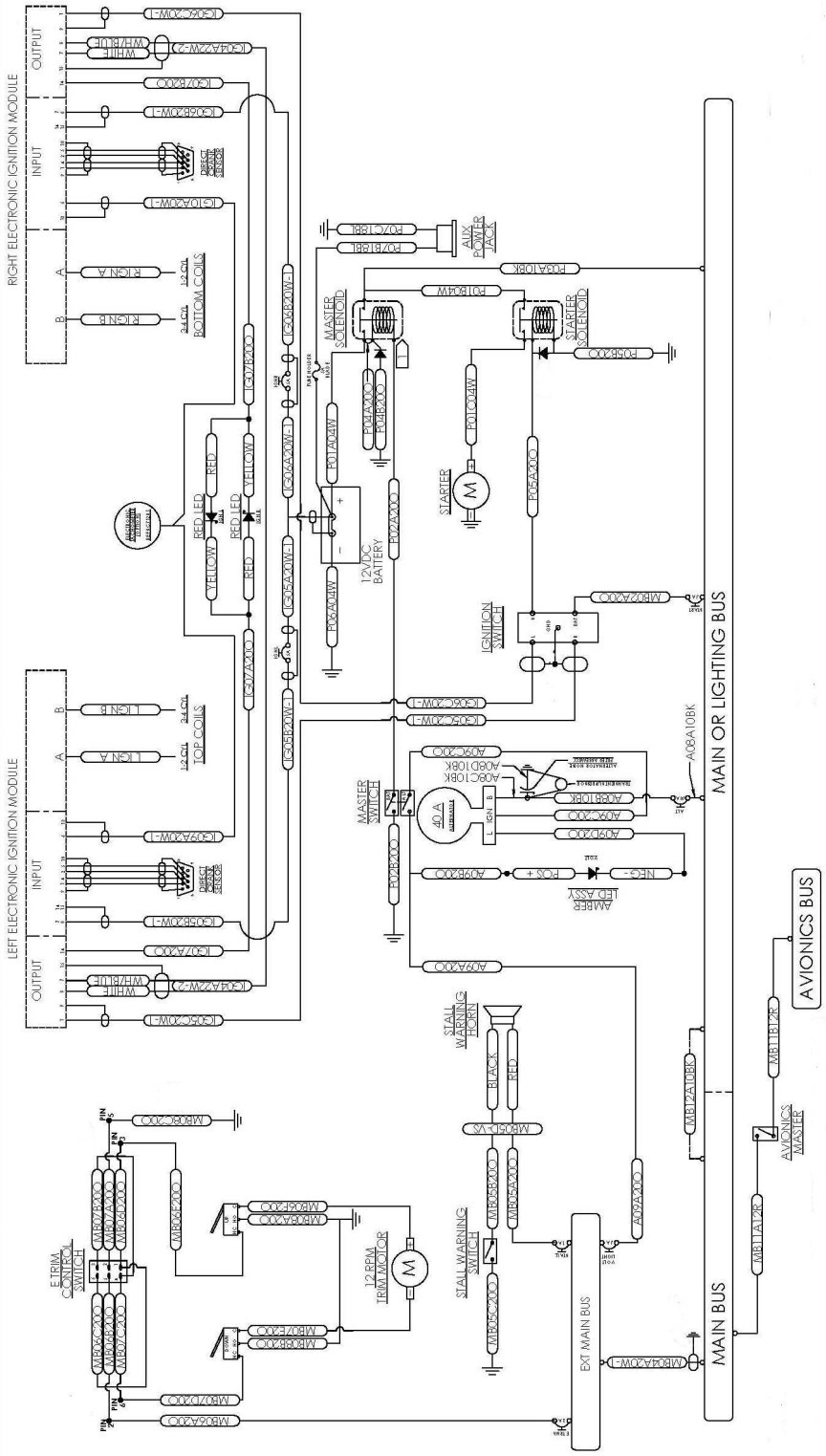

Figure 5.4.14.1: Electrical System Schematic without Ignition Backup Battery

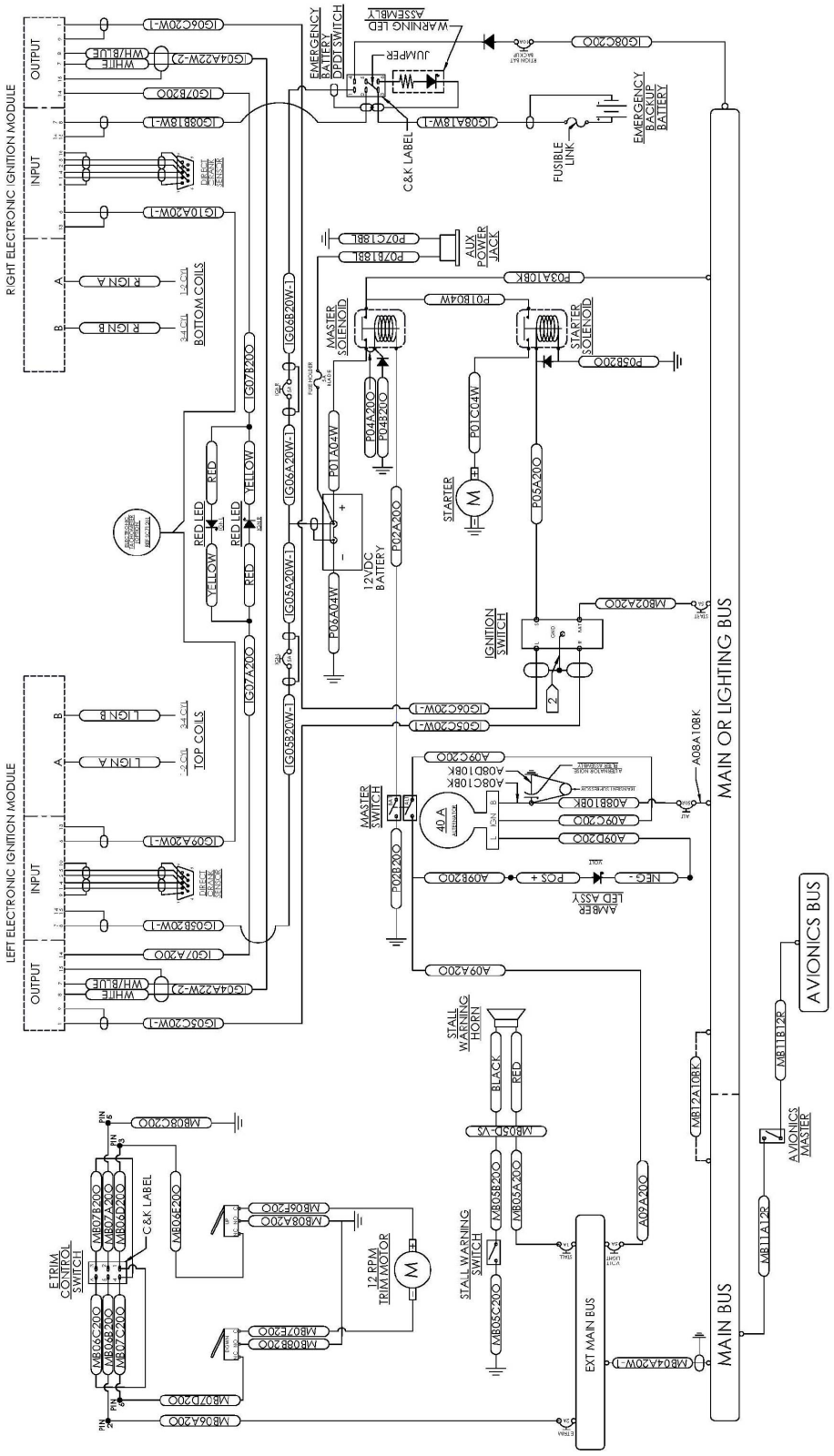

Figure 5.4.14.2: Electrical System Schematic with Ignition Backup Battery

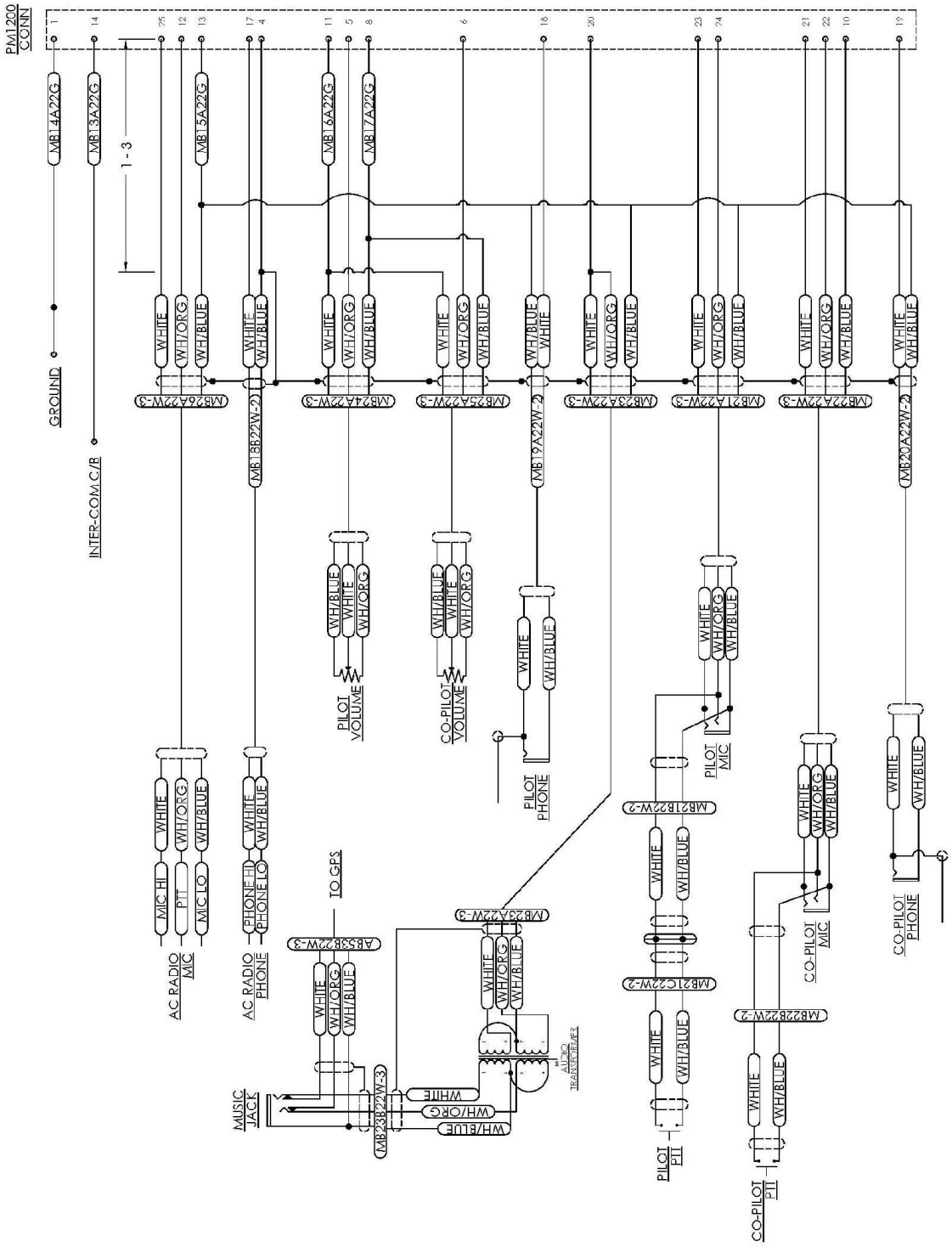

Figure 5.4.14.3: PM1200 Intercom System Schematic w/ Intercom

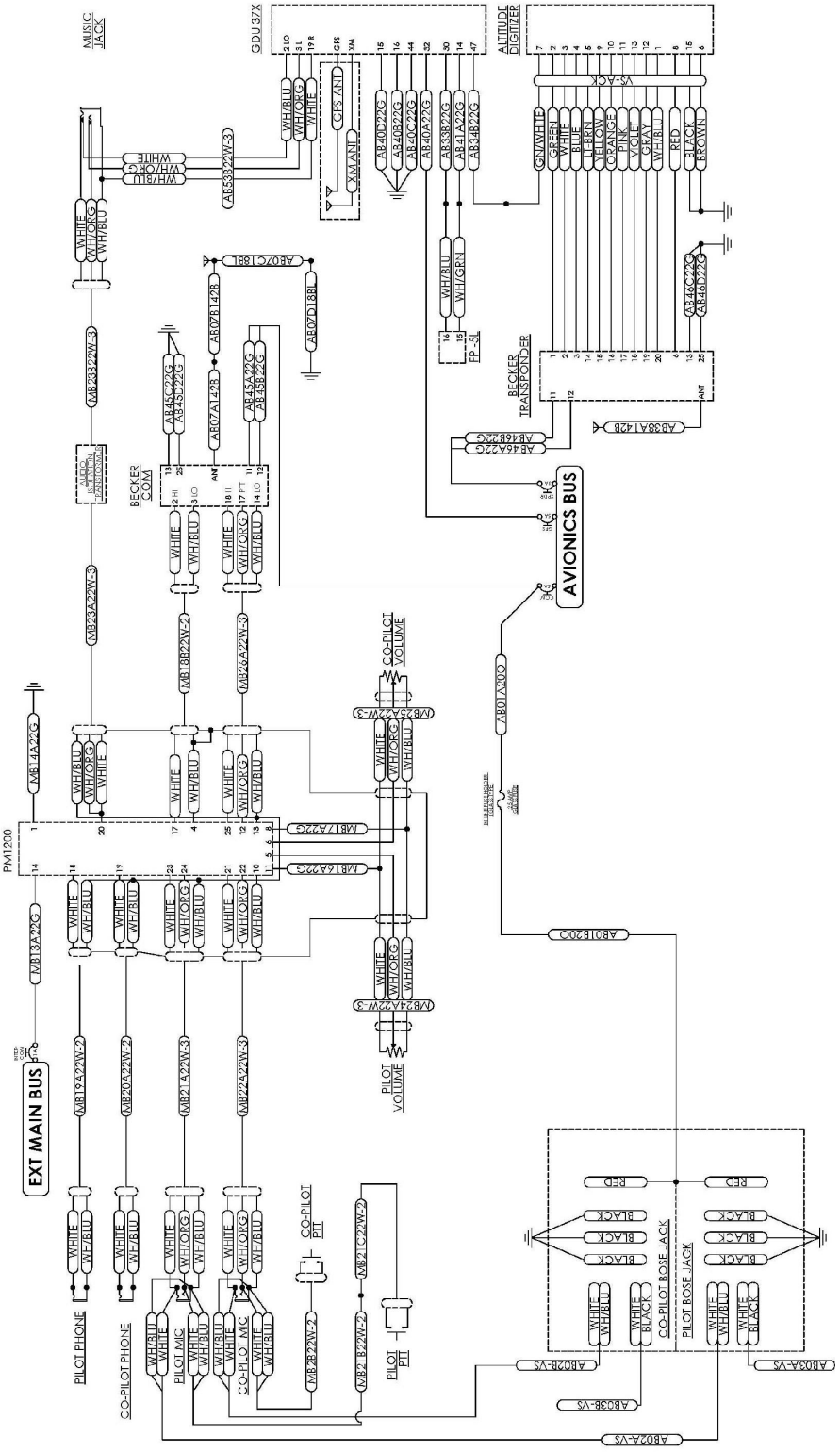

Figure 5.4.14.4: Performance Avionics System Schematic w/ Intercom

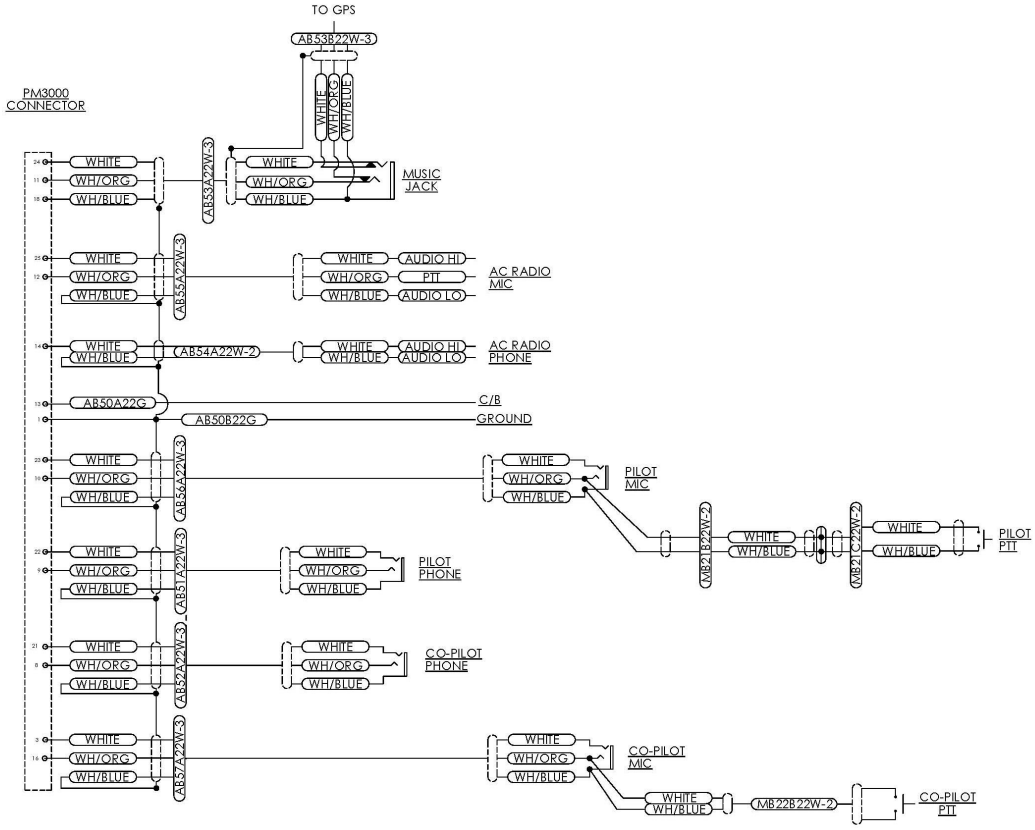

Figure 5.4.14.5: PM3000 Intercom System Schematic

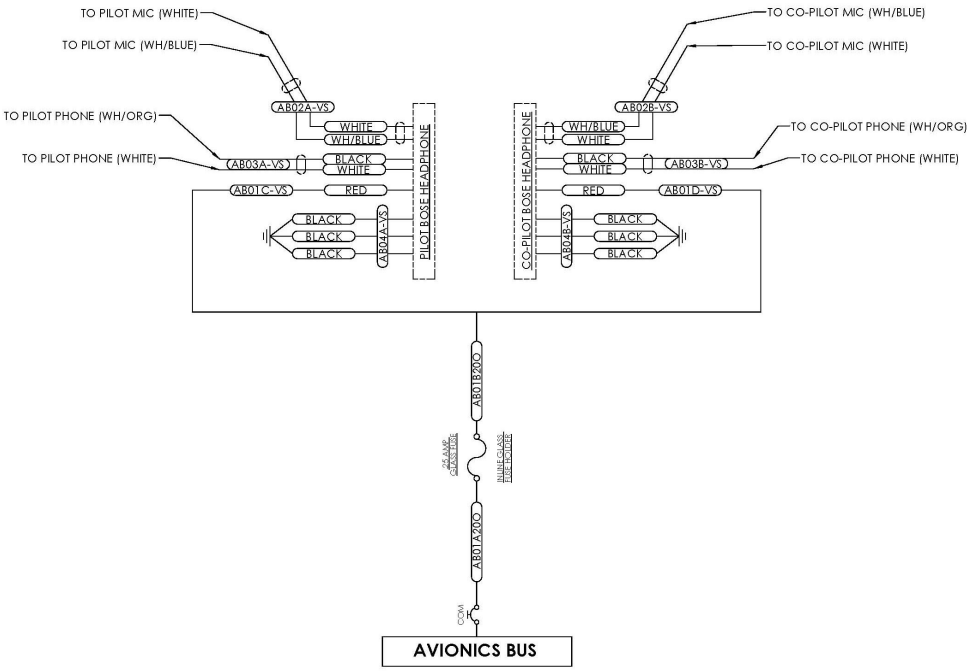

Figure 5.4.14.6: Active Noise Reduction Intercom Systems

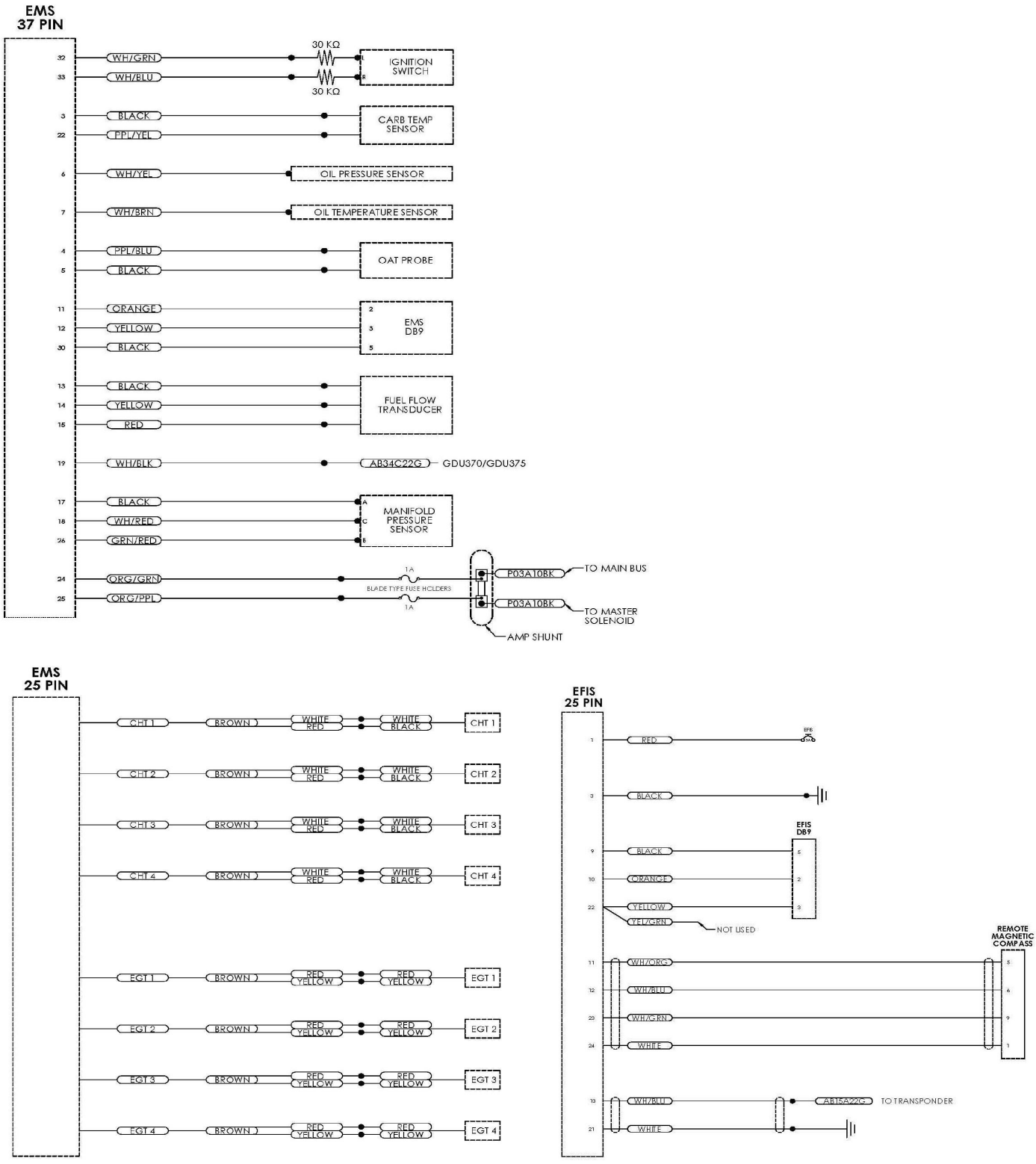

Figure 5.4.14.7: Dynon Schematic

3 LIGHTING SYSTEMS

(1) GENERAL

Optional anti-collision light assemblies may be installed on each wingtip. These consist of navigation light and a strobe light. There is also a position light on the tail of the aircraft.

An optional landing light may be mounted in the leading edge of the left wing. Refer to Section 6.3.19 for the maintenance of Lighting Systems.

(2) SCHEMATICS

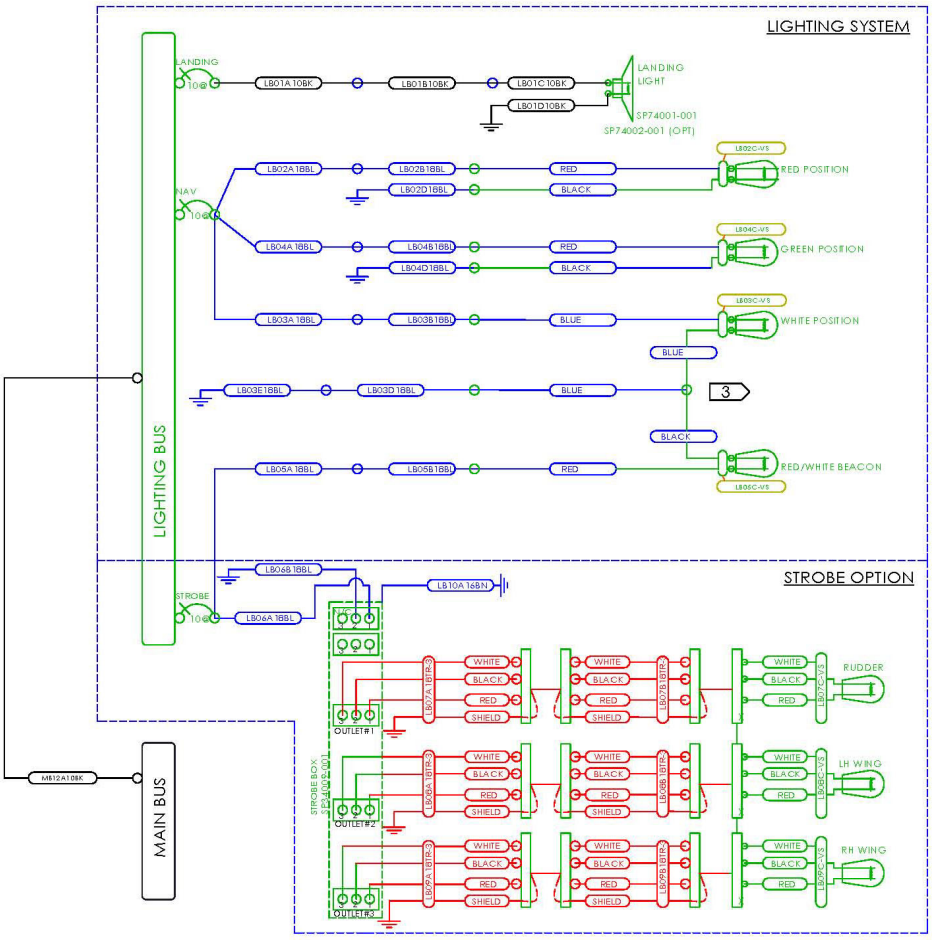

Figure 5.4.14.8: Incandenscent Lighting Schematic (S/N 00093 thru S/N 00106)

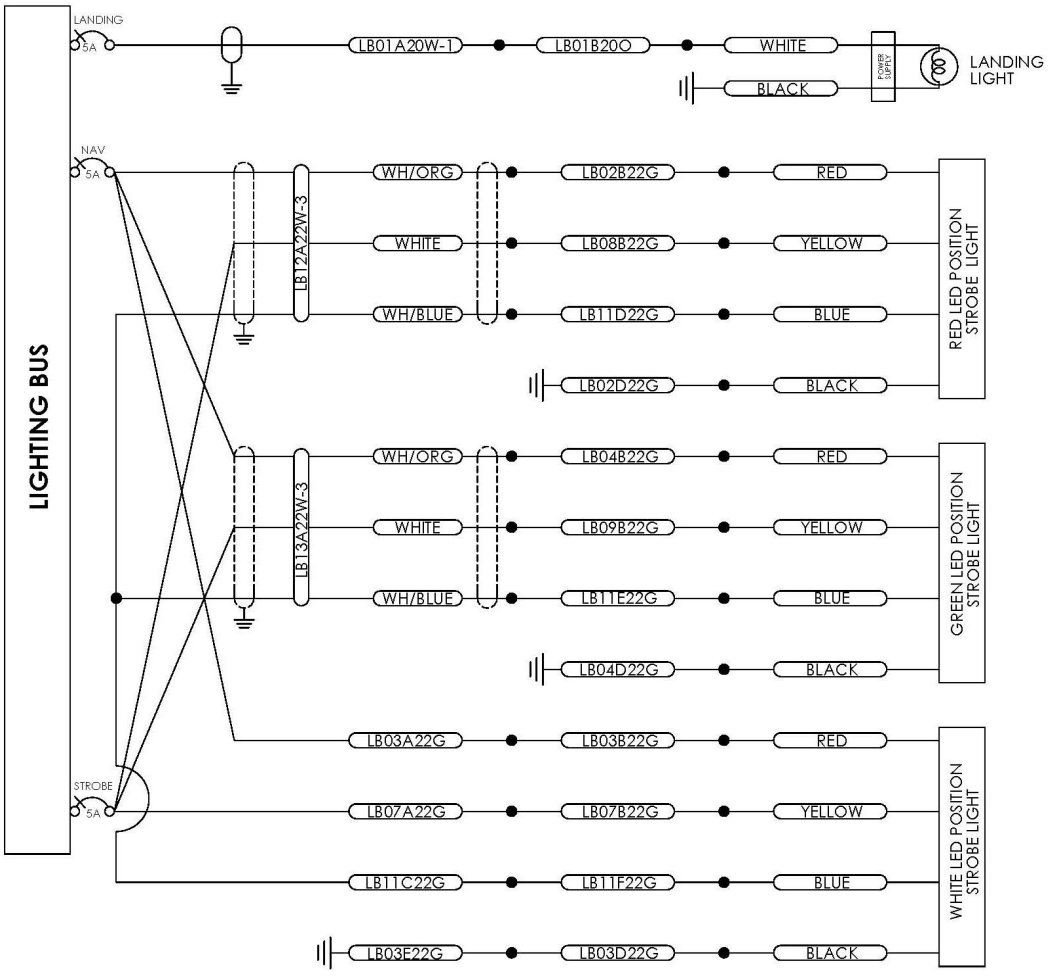

Figure 5.4.14.9: LED Lighting System Schematic (S/N 00107 and on)

4 EMERGENCY SYSTEMS: ELT

(1) GENERAL

The aircraft is supplied with an emergency locator transmitter (ELT) that meets TSO C91a. The ELT is mounted in a bracket directly underneath the pilot's seat and may be accessed through an opening on the forward side of the seat column. RCPI Unit is optional and wiring may not be present.

(2) SCHEMATIC

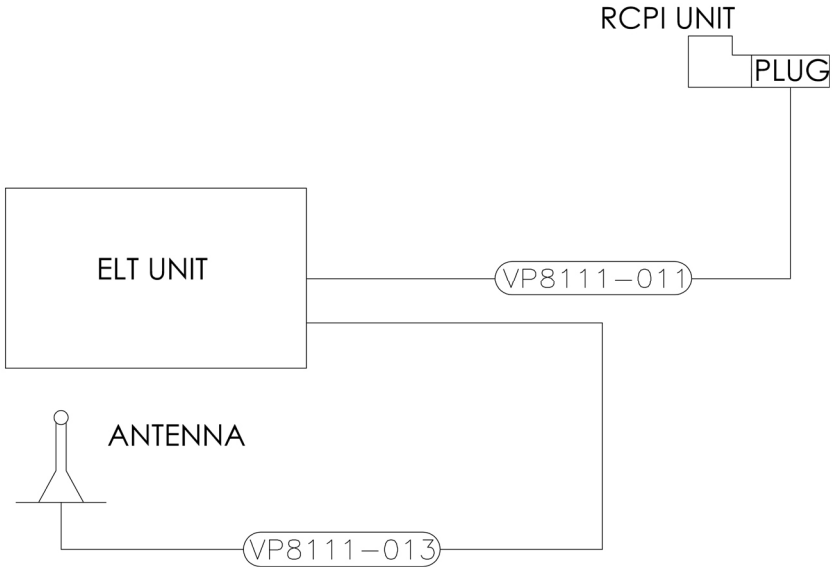

Figure 5.4.14.10: ELT Schematic

INTENTIONALLY LEFT BLANK

5.4.15 SEATS

TABLE OF CONTENTS

1. GENERAL....2
2. REAR SEAT STOWAGE....4
3. REAR SEAT INSTALLATION....6
4. MAINTENANCE....6

1. GENERAL

The front seat is made from composite with a foam cushion and covered with either canvas or leather material. It is attached to the seat base at the front with screws on both sides. There are two quick-release T-Handle pins, one on each side, at the rear of the seat to adjust the seat position. See Figure 1 and 2.

WARNING:
T-HANDLES MUST BE SECURED IN PLACE PRIOR TO TAKE OFF.

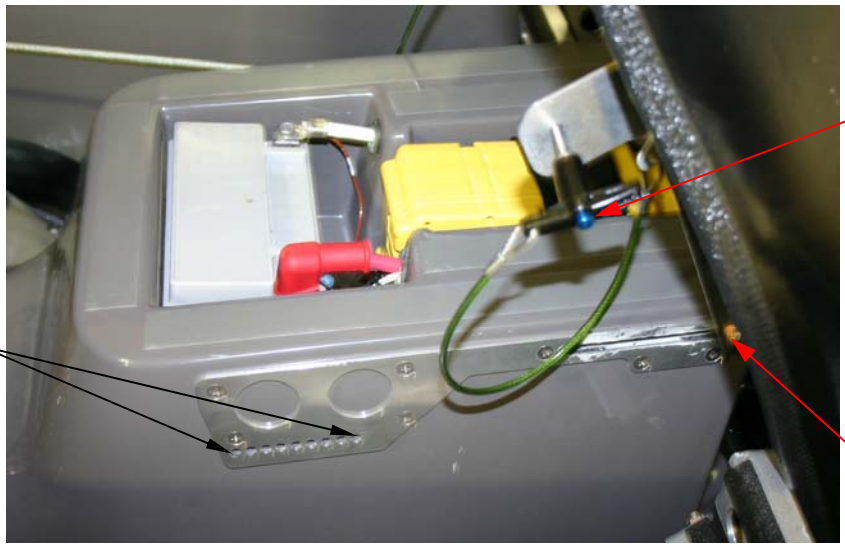

Figure 1 - Front Seat Attachment

Figure 2 - Front Seat

The rear seat is made of fabric with inserted composite stringers. The seat is attached in front by a steel cross bar. The steel cross bar is held in place to the floorboard by two cinched nylon straps. The top of the rear seat is secured in place by straps integrated into the seat. The upper straps are wrapped around the fuselage tubes above and incorporate a slide adjuster. See Figure 3.

Figure 3 - Rear Sling Seat Installed

2. REAR SEAT STOWAGE

Disconnect the two cinched nylon straps holding the seat cross bar in place. Unscrew and push the screw in to allow the tab to rotate and slide pin out of seat base connector. See Figure 4.

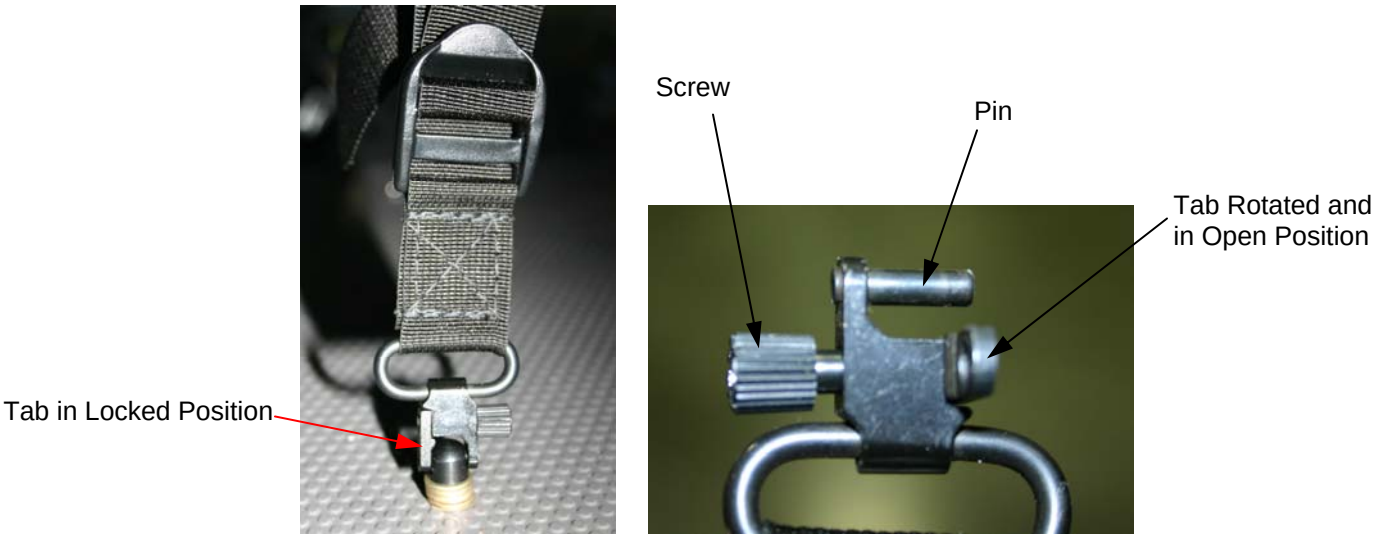

Figure 4 - Cross Bar Strap Attachment

Remove cross bar from fuselage slots. Slide the seat straps and nylon straps off of the cross bar. Place and secure cross bar in aft storage compartment. Remove cushion from seat. See Figure 5.

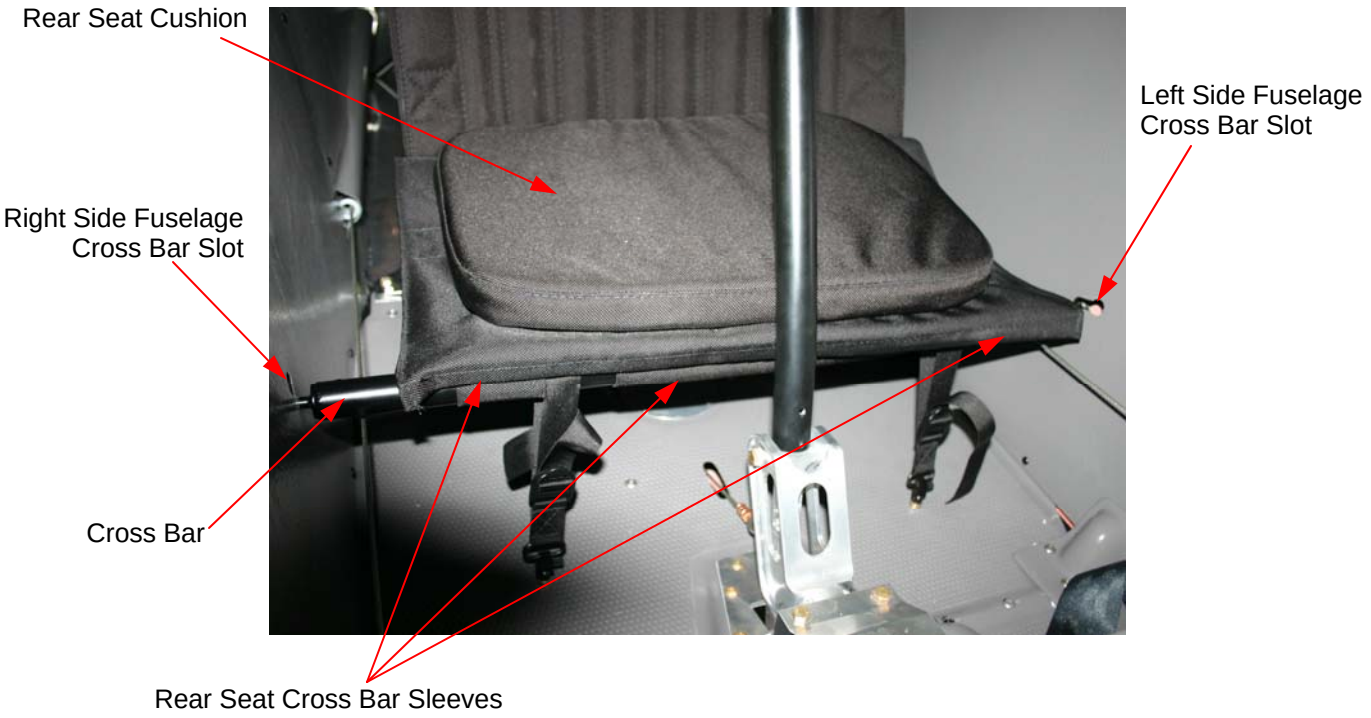

Figure 5 - Rear Cross Bar and Strap Attachment

Fold rear seat up and stow in sling seat holder. Place seat cushion and cross bar straps in sling seat holder. See Figure 6.

Figure 6 - Rear Seat Stowage in Sling Seat Holder

3. REAR SEAT INSTALLATION

Slide the seat straps and nylon straps on to the cross bar in the correct order. Install the cross bar in to the fuselage slots. See Figure 5.

Connect the two cinched nylon straps to the floorboard to hold the seat cross bar in place. See Figure 4. Install the seat cushion by lining up the hook and loop tape on the bottom of the seat cushion and top of rear seat.

Ensure the straps in front of the seat are cinched tight enough to hold cross bar in slots at either end. Ensure the top straps are secure and verify proper routing of straps around fuselage tube and through slide adjuster. See Figure 7.

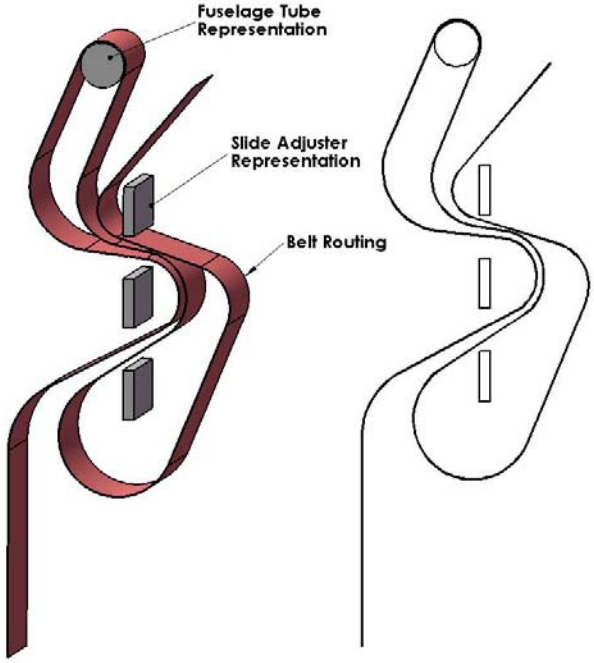

Figure 7 - Rear Seat Upper Strap Routing

4. MAINTENANCE

No major repair or alterations, as outlined in ASTM F2483, FAR 43, or in this manual are authorized at this time.

To obtain engineering approvals for any major repairs or alterations, please contact Cub Crafters at:

Cub Crafters, Inc.
1918 South 16th Avenue
Yakima, WA. 98903
Tel: 509-248-9491
support@cubcrafters.com

5.5 STRUCTURAL REPAIRS

1. GENERAL.....2

1. GENERAL

No major repair structural repairs or structural alterations, as outlined in ASTM F2483, FAR 43, or in this manual are authorized at this time.

To obtain engineering approvals for any major repairs or alterations, please contact Cub Crafters at:

Cub Crafters, Inc.
1918 South 16th Avenue
Yakima, WA. 98903
Tel: 509-248-9491
support@cubcrafters.com

5.6 PAINTING AND COATINGS

Table of Contents

1. GENERAL 2
2. PAINTING 2
2.1 PREPARATION 2
(1) PREPARATION OF METAL 2
(2) PREPARATION OF COMPOSITES 2
(3) PREPARATION OF FABRIC 2
2.2 PAINTING 2
(1) GENERAL 2

1. GENERAL

For repair and maintenance of painting in details, refer to Poly-Fiber, Inc.'s "How to Cover An Aircraft Using the Poly-Fiber System" Procedure Manual.

2. PAINTING

2.1 PREPARATION

(1) PREPARATION OF METAL

(a) Sand surfaces with 180-320 grit sandpaper & very fine red Scuffpads.

(b) Degrease components with DX330 per manufacturer's instructions.

(c) Mix and apply PPG Metal Primer DX1787 and DX1788 per manufacturer's instructions.

(d) Allow primer to dry at 140°F for 20 minutes.

(e) Sand primed surface. Use 400 grit sandpaper in areas where DUHS will be used, or 600 grit sandpaper where PolyTone will be used.

(2) PREPARATION OF COMPOSITES

(a) Degrease components with an alcohol based cleaner per manufacturer's instructions.

(b) Sand with 400 grit sandpaper, blow and tack off.

(3) PREPARATION OF FABRIC

(a) Smooth any edges with a small iron. Use dry 400-grit sandpaper to smooth tape and doubler edges and remove surface dust bumps. 3M 8500 Sealant or equivalent can be used to cover seams in corners, as needed.

2.2 PAINTING

(1) GENERAL

(c) The final finish is either a polyurethane DUHS paint from PPG or PolyTone paint.

(d) Mix the DUHS paint in accordance with the PPG's application guide.

(e) Spray the first coat with a HVLP gun with a 30-50 psi inlet pressure. Allow first coat to become hand slick, then apply a second coat.

(f) After a minimum of 15 minutes (or after the paint has flashed off), bake the surface for a minimum of 30 minutes @ 120°F ±10° or air dry at 70°F for approximately eight hours.

CHAPTER
6

LINE MAINTENANCE, REPAIRS, AND ALTERATIONS

INTENTIONALLY LEFT BLANK

6 LINE MAINTENANCE, REPAIRS, AND ALTERATIONS

6.1 .. AUTHORIZATION TO PERFORM LINE MAINTENANCE, REPAIRS, AND ALTERATIONS
6.2 ..... LINE MAINTENANCE TASKS
6.3 ..... REMOVAL & REPLACEMENT OF COMPONENTS
6.4 ..... REPAIR OF STRUCTURE & COMPONENTS
6.5 ..... ALTERATIONS

INTENTIONALLY LEFT BLANK

6.1 GENERAL

TABLE OF CONTENTS

1. AUTHORIZATION TO PERFORM LINE MAINTENANCE, REPAIRS, ALTERATIONS, AND INSPECTIONS 2
2. FAA AUTHORIZATION FOR PILOT/OWNER TO PERFORM LINE MAINTENANCE TASKS 6

1. AUTHORIZATION TO PERFORM LINE MAINTENANCE, REPAIRS, ALTERATIONS, AND INSPECTIONS

Table 6.1.1 shows the certifications required to perform line maintenance, repairs, alterations, and inspections on CubCrafters CC11-160 Carbon Cub SS aircraft, as defined by ASTM F2483 Section 3.1.12. Guidance for accomplishing such maintenance, repairs, alterations, and inspections is contained in this manual; and is to be accomplished in accordance with the practices contained in FAA Advisory Circular 43.13.

CUB CRAFTERS CARBON CUB SS MAINTENANCE BREAKDOWN

DESCRIPTION	OWNER / OPERATOR OR ABOVE	LSA REPAIRMAN-I, REPAIRMAN-M, A&P, OR REPAIR STATION	REPAIRMAN-M, A&P, OR REPAIR STATION	HEAVY-A&P OR REPAIR STATION
AIRCRAFT COVERING				
Minor Repairs	X		X	
Major Repairs			X	
AIRCRAFT PAINTING				
Minor Repairs	X		X	
Major Repairs			X	
AIRCRAFT TASKS				
Rigging Wings				X
Rigging Tail Brace Wires				X
Rigging Tail Control Surfaces				X
Jacking Aircraft	X			
Condition Inspection		X		
100 Hour Inspection			X	
Preventive Maintenance	X		X	
Lubrication	X			
PREPARATION				
For Storage			X	
For Use			X	
For Shipment			X	
SYSTEM DIAGRAMS				
Electrical System			X	
Standard Avionics System			X	
Avionics System – Intercom			X	
Lighting System			X	
ELT Schematic			X	
Brake System			X	
Fuel System			X	

DESCRIPTION	OWNER / OPERATOR OR ABOVE	LSA REPAIRMAN-I, REPAIRMAN-M, A&P, OR REPAIR STATION	REPAIRMAN-M, A&P, OR REPAIR STATION	HEAVY-A&P OR REPAIR STATION
FLIGHT CONTROLS				
Aileron Controls			X	
Elevator Controls			X	
Flap Controls			X	
Rudder Pedals/Controls			X	
WING INSTALLATION				
Wingtip Lights	X			
Landing Light	X			
Vortex Generators			X	
Tie-Down Ring			X	
Front Wing Strut			X	
Rear Wing Strut			X	
Ailerons			X	
Flaps			X	
Pitot Tube			X	
Stall Warning			X	
Fuel Tanks			X	
Wing Assembly			X	
ENGINE INSTALLATION				
Engine Assembly	Cub Crafters or Cub Crafters Delegate			
Air Filter	X		X	
Exhaust System			X	
Oil Cooler			X	
Oil Filter and Oil Change	X			
Alternator			X	
Plasma III Electronic Ignition System			X	
Carburetor			X	
Starter			X	
Propeller –Spinner			X	
FUSELAGE				
Cowling Removal	X			
Cowling Repair			X	
Cowl Flaps Positioning	X			
Firewall Components			X	
Fuel Lines, Fittings, and Parts			X	
Fuel Selector Valve			X	

DESCRIPTION	OWNER / OPERATOR OR ABOVE	LSA REPAIRMAN-I, REPAIRMAN-M, A&P, OR REPAIR STATION	REPAIRMAN-M, A&P, OR REPAIR STATION	HEAVY-A&P OR REPAIR STATION
Fuel Filter			X	
Fuel Drain	X			
Front Seat Assembly			X	
Front Seat Shoulder Harness	Cub Crafters or Cub Crafters Delegate			
Rear Seat Assembly			X	
Rear Seat Shoulder Harness	Cub Crafters or Cub Crafters Delegate			
Brake Master Cylinder			X	
Brake Lines and Fittings			X	
Windshield			X	
Sky Light			X	
Front Windows	X			
Rear Windows	X			
Window Assembly	X			
Door Assembly (with Latch)			X	
Battery	X			
Ignition Backup Battery Removal	X			
ELT Assembly			X	
ELT Battery	X			
ELT Antenna			X	
Instrument Panel Assembly			X	
Instrument Panel Wiring			X	
Airspeed Indicator			X	
Altimeter			X	
Compass			X	
Tachometer			X	
Oil Temperature Gauge			X	
Oil Pressure Gauge			X	
Inclinometer			X	
Voltage Warning Light			X	
Mixture Control			X	
Cabin Heat Control			X	
Master Switch			X	
Circuit Breakers			X	
Avionics Master Switch			X	
12 VDC Auxiliary Plug			X	
Radio Antenna			X	

DESCRIPTION	OWNER / OPERATOR OR ABOVE	LSA REPAIRMAN-I, REPAIRMAN-M, A&P, OR REPAIR STATION	REPAIRMAN-M, A&P, OR REPAIR STATION	HEAVY-A&P OR REPAIR STATION
Garmin GPS (Removal)	X			
COM Radio (Removal)	X			
Intercom (Removal)	X			
Transponder (Removal)	X			
Bose Headset Wiring			X	
Dynon Flight DEK-D180			X	
Vertical Speed Indicator			X	
Turn and Bank Indicator			X	
Engine Primer			X	
Clock			X	
Primer			X	
Landing Gear Installation			X	
Struts and Bungees			X	
Landing Gear			X	
Wheel and Tires			X	
Tire Inflation	X			
Brake Assembly			X	
Tail Wheel Assembly			X	
Steerable Tail Wheel			X	
Trim Motor			X	
Tail Brace Wires			X	
Horizontal Stabilizer			X	
MISCELLANEOUS				
Placards and Data Plates	X			

TABLE 6.1.1

2. FAA AUTHORIZATION FOR PILOT/OWNER TO PERFORM LINE MAINTENANCE TASKS

The tasks listed in this Manual, and considered to be Minor Maintenance, Repairs, or Alteration tasks - as defined in ASTM F2483 Section 3.1.12 - and may be performed by the Pilot/Owner and who is the holder of an FAA Sport Pilot, Recreational Pilot, Private Pilot, Commercial, or Airline Transport Pilot Certificate.

6.2 LINE MAINTENANCE TASKS

TABLE OF CONTENTS

1. 100 HOUR INSPECTION 2
2. CONDITION INSPECTION 2
3. SERVICING OF FLUIDS 2

1. 100 HOUR INSPECTION

Refer to section 5.3.3 of this manual for 100 Hour Inspection requirements

2. CONDITION INSPECTION

Refer to section 5.3.2 of this manual for Condition Inspection requirements

3. SERVICING OF FLUIDS

This information gives the general servicing procedures and maintenance practices that are to be used when servicing the airplane. For additional detailed information concerning unit servicing of the various airplane systems and components, refer to the applicable chapters. For electrical wiring diagrams, refer to the Wiring Diagram Manual.

The intervals specified in Section 6A are considered adequate to meet average requirements under normal operating conditions. However, it is advisable to shorten the service and maintenance intervals when operating under abnormal environmental conditions, such as high humidity and moisture, salt water environments, dusty atmospheric conditions, extreme temperature ranges, unimproved airport facilities, or other unusual operating requirements. In salt water areas, special care should be taken to keep the engine, accessories, and airframe clean to help prevent oxidation.

CAUTION
The operation of the airplane can be seriously impaired if unapproved or contaminated fuel, oil, fluids, lubricants or materials are used. Adherence to instructions, cautions, and warnings can avoid injury to personnel and damage to the airplane or associated equipment.

Mixing of various brands, types, and weights of materials should be avoided. Specified lubricants will meet requirements for extreme hot or cold temperature operations. Use of substitutes or other lubricants may cause a malfunction when operating in extreme temperature conditions, or may cause excessive wear due to improper lubrication.

Item	Specifications		Capacity
Fuel	Aviation Grade 100/100LL	Single Tank per Wing	25 US Gallons Total 24 US Gallons Usable
		Two Interconnected Tanks per Wing	44 US Gallons Total 40 US Gallons Usable
Oil	Phillips XC 20W50		6 Quarts Maximum 3.5 to 5 Quarts recommended for operation
Hydraulic Fluid	MIL-H-5606G		As required
Main Tire Pressure	6.00 x 6	Dry Air	29 ± 2 psi
	8.00 x 6	Dry Air	23 ± 2 psi
	8.50 x 6	Dry Air	18 ± 2 psi
	26” Airstreak Tundra Tires	Dry Air	6 - 12 psi
	29” Airstreak Tundra Tires	Dry Air	6 - 12 psi
Tail Wheel Pressure	ABW 3200-Type	Dry Air	50 - 60 psi
	ABW-3200B “Tundra”	Dry Air	8 - 20 psi

Table 6.2.1: Fuel, Oil, Brake Fluid, and Tire Pressures

LUBRICATION CHART		
ITEM	**SUGGESTED**	**SPEC**
ENGINE		
Engine Oil	Phillips XC 20W50	
Spark Plug Thread Lubricant	Champion Aerospace # 2612	
Oil Filter Gasket	Dow Corning 4 Lubricant	MIL-S-8660C
COCKPIT		
Hydraulic Fluid (Brake)	Any Brand	MIL-H-5606
Control Stick Pivot Points Torque Tube Bearings	LPS 2	MIL-C-16173E GRADE 3 CLASS I
Elevator Pulley Shafts and Bushings	LPS 2	MIL-C-16173E GRADE 3 CLASS I
Aileron Pulley Shafts and Bushings	LPS 2	MIL-C-16173E GRADE 3 CLASS I
Rudder Pedal Pivot Points Brake Pedal Pivot Points	LPS 2	MIL-C-16173E GRADE 3 CLASS I
Flap Handle Shaft	LPS 2	MIL-C-16173E GRADE 3 CLASS I
Door Hinges	LPS 2	MIL-C-16173E GRADE 3 CLASS I
Fuel Fittings with Pipe Threads	EZ TURN Lubricant	MIL-G-6032D
Fuel Selector O-Rings	Dow Corning 4 Lubricant	MIL-S-8660C
FUSELAGE		
Flap Rod Ball Ends	LPS 2	MIL-C-16173E GRADE 3 CLASS I
Stabilizer Jackscrew	Mobilgrease 28	MIL-G-81322E
Trim Pulley Shafts	LPS 2	MIL-C-16173E GRADE 3 CLASS I
Fuel Fittings with Pipe Threads	EZ TURN Lubricant	MIL-G-6032D
LANDING GEAR		
Main Landing Gear Shock Strut Pivot Points	LPS 2	MIL-C-16173E GRADE 3 CLASS I

LUBRICATION CHART		
ITEM	**SUGGESTED**	**SPEC**
Main Landing Gear Pivot Points	LPS 2	MIL-C-16173E GRADE 3 CLASS I
Main Wheel Bearings	Mobilgrease 28	MIL-G-81322E
Tail Wheel Swivel	Mobilgrease 28	MIL-G-81322E
Tail Wheel Bearings	Mobilgrease 28	MIL-G-81322E
EMPENNAGE		
Stabilizer Tube Liners	Mobilgrease 28	MIL-G-81322E
Elevator Hinge Pins	LPS 2	MIL-C-16173E GRADE 3 CLASS I
Rudder Hinge Pins	LPS 2	MIL-C-16173E GRADE 3 CLASS I
Fuel Fittings with Pipe Threads	EZ TURN Lubricant	MIL-G-6032D
WING		
Aileron and Flap Hinge Pins	LPS 2	MIL-C-16173E GRADE 3 CLASS I
Aileron Pulley Shafts and Bushings	LPS 2	MIL-C-16173E GRADE 3 CLASS I
Flap Crossbar Bushings, Arm, Pushrod, and Hinge Pivot Points	LPS 2	MIL-C-16173E GRADE 3 CLASS I

INTENTIONALLY LEFT BLANK

6.3 REMOVAL & REPLACEMENT OF COMPONENTS

6.3.1.....GENERAL
6.3.2..... JACKING AND LIFTING
6.3.3.....FUSELAGE
6.3.4.....WINGS
6.3.5..... EMPENNAGE
6.3.6..... FLIGHT CONTROLS
6.3.7.....LANDING GEAR
6.3.8..... WHEEL AND BRAKE ASSEMBLIES
6.3.9..... ENGINE MOUNT
6.3.10..... ENGINE
6.3.11.....ENGINE CONTROLS
6.3.12..... AIR INDUCTION SYSTEMS
6.3.13..... EXHAUST SYSTEM
6.3.14.....ENGINE COWL
6.3.15..... FUEL SYSTEM
6.3.16..... PROPELLER
6.3.17.....ELECTRICAL POWER SYSTEMS
6.3.18..... POWERPLANT – IGNITION
6.3.19.....ELECTRICAL
6.3.20..... STALL WARNING SYSTEM
6.3.21.....HOSES AND LINES
6.3.22..... LEVELING
6.3.23..... WEIGHING
6.3.24..... PARKING AND MOORING

INTENTIONALLY LEFT BLANK

6.3.1 GENERAL

This section describes the removal method and replacement of components for line maintenance, repairs, and alterations. For maintenance and repair of primary structures, see Section 5.4.

This section also lists the components that Cub Crafters recommends be replaced at specified intervals. Whenever this is carried out, ensure that the following information is properly recorded in the airplane maintenance log:

- Date of removal, installation, or overhaul of the component.
- Time on the component since last overhaul (if appropriate).
- Aircraft's flight hours.

(1) Replacement Times

	ITEM	INTERVAL	REPLACE	OVERHAUL	REF. IN THIS MANUAL	NOTES
1	Engine	2400 Hours		X		Refer to the latest revision of CC340 Engine manual
2	Propeller				6.3.16	See manufacturer's maintenance Manual
3	Alternator	At engine overhaul		X		
4	Starter	At engine overhaul		X		
5	Exhaust System	1000 Hours		X		
6	Induction Air Box	2000 hours	X			
7	Flexible Fuel Lines	12 years or engine overhaul, whichever comes first	X			
8	Flexible Oil System Lines	12 years or engine overhaul, whichever comes first	X			
9	Ignition Backup Battery	Annually	X			

	ITEM	INTERVAL	REPLACE	OVERHAUL	REF. IN THIS MANUAL	NOTES
10	Emergency Locator Transmitter Batteries	After 1 hour of cumulative transmitting. Date Marked on the Batteries by Duracell.	X		Chapter 5.4.7	Refer to Manufacture's Installation and Operation Manual
11	Remote ELT Switch Battery (if installed)	8 years Lithium 4 years Alkaline	X			
12	Fire Extinguisher	12 years from date of manufacture	X			Applicable to model RT A400. Replace if gross weight is less than 17.7 oz.
13	Rubber Engine Mount Bushings	At engine overhaul	X			
14	Landing Gear Bungees	5 Years	X			Replace more frequently when bungees are no longer strong enough to return the landing gear to its stops or whenever they are frayed or damaged
15	Tail Brace Wires	2000 hours	X			

6.3.2 Jacking the Airplane

(1) TOOLS EQUIPMENT AND SUPPLIES

Description	P/N or Spec.	Supplier	Purpose
Floor Jack	-	Any Source	Jack Main Wheels
Wooden Saw Horse or Bench	-	Any Source	Place Under Tail
Wing Jack	-	Any Source	Jack From Wing

CAUTION
Do not jack the aircraft outside or in an open hangar with winds in excess of 10 knots.

NOTE
Raise airplane no more than required for the maintenance being performed

(2) RAISING THE TAIL

(a) Set the parking brakes and place chocks under main wheels.

(b) Grab under the empennage and raise the airplane to place a tripod or saw horse under the tall wheel springs, as indicated in Figure 6.3.2.1.

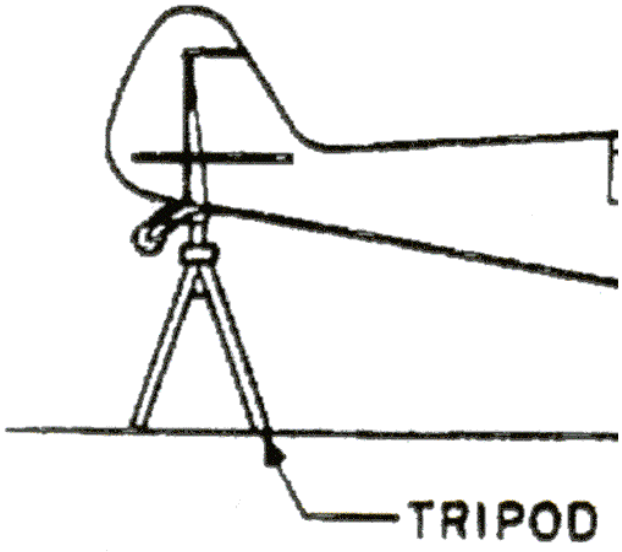

Figure 6.3.2.1: Raising the Tail

(3) RAISING THE AIRCRAFT FROM THE LANDING GEAR
Use this method to service the wheels and brakes.

(a) Place a chock under the opposite main wheel and tail wheel.

(b) Place a jack under the main axle as shown in Figure 6.3.2.2.

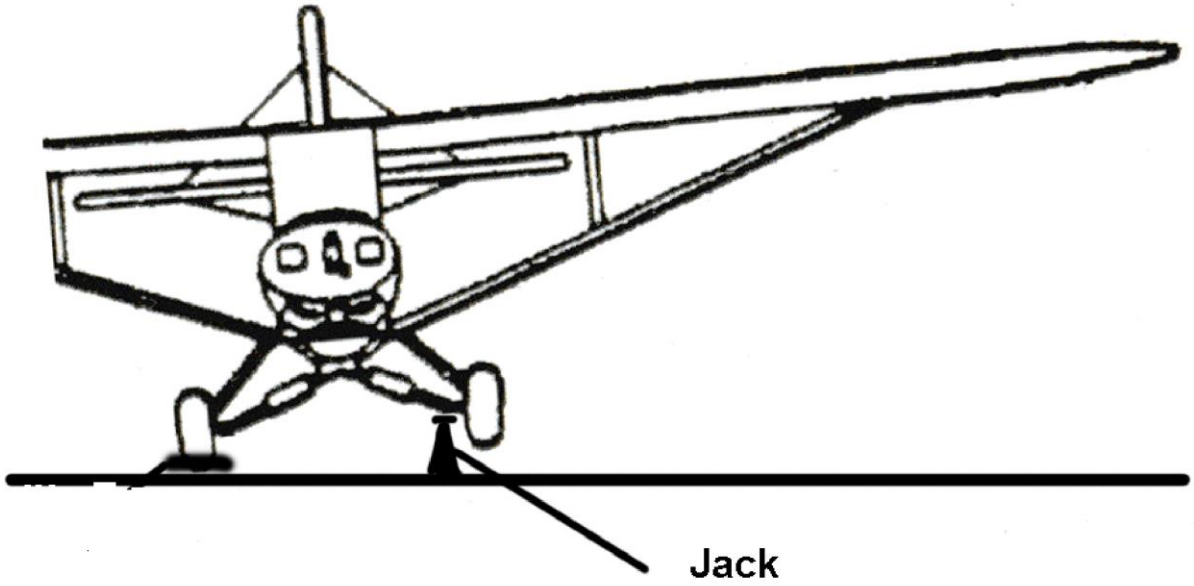

Figure 6.3.2.2: Jacking from Main Axle

(4) RAISING THE AIRCRAFT FROM THE WING

Use this method for complete removal of landing gear leg.

(a) Place chock under opposite main wheel and tail wheel.

(b) Place jack between the main lift strut wing attachment point and the tie down (Refer to 6.3.2.3). Jack one side at a time. Jacking both sides simultaneously is to be avoided.

Figure 6.3.2.3: Jacking from the Wing

INTENTIONALLY LEFT BLANK

6.3.3 FUSELAGE

TABLE OF CONTENTS

1 FUSELAGE....2
(1) INSPECTION....2
(2) REPAIR....2

1 FUSELAGE

(1) INSPECTION

See inspection forms in Appendix 6.A to perform periodic inspection tasks.

(2) REPAIR

No major repair or alterations, as outlined in ASTM F2483, FAR 43, or in this manual are authorized at this time.

To obtain engineering approvals for any major repairs or alterations, please contact Cub Crafters at:

Cub Crafters, Inc.
1918 South 16th Avenue
Yakima, WA. 98903
Tel: 509-248-9491
support@cubcrafters.com

6.3.4 WINGS

TABLE OF CONTENTS

1. SERVICING 2
(1) REMOVAL 4
(2) INSTALLATION 5
2. RIGGING THE WINGS 7
(1) PREPARATION 7
(2) DIHEDRAL ANGLE 7
(3) WASHOUT ANGLE 8
3. VORTEX GENERATORS 9
4. MAINTENANCE 9

1. SERVICING

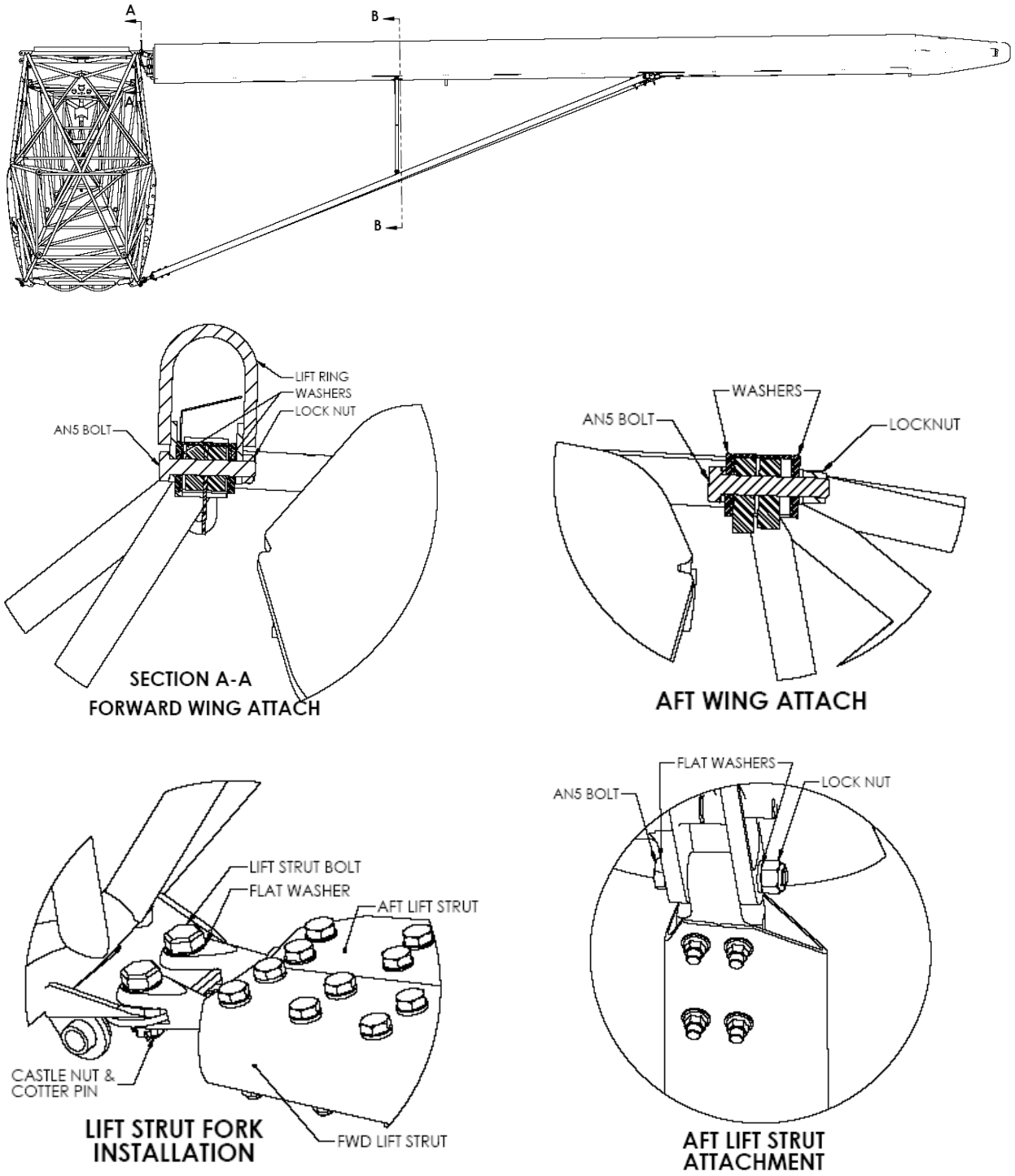

Figure 6.3.4.1: Wing Installation

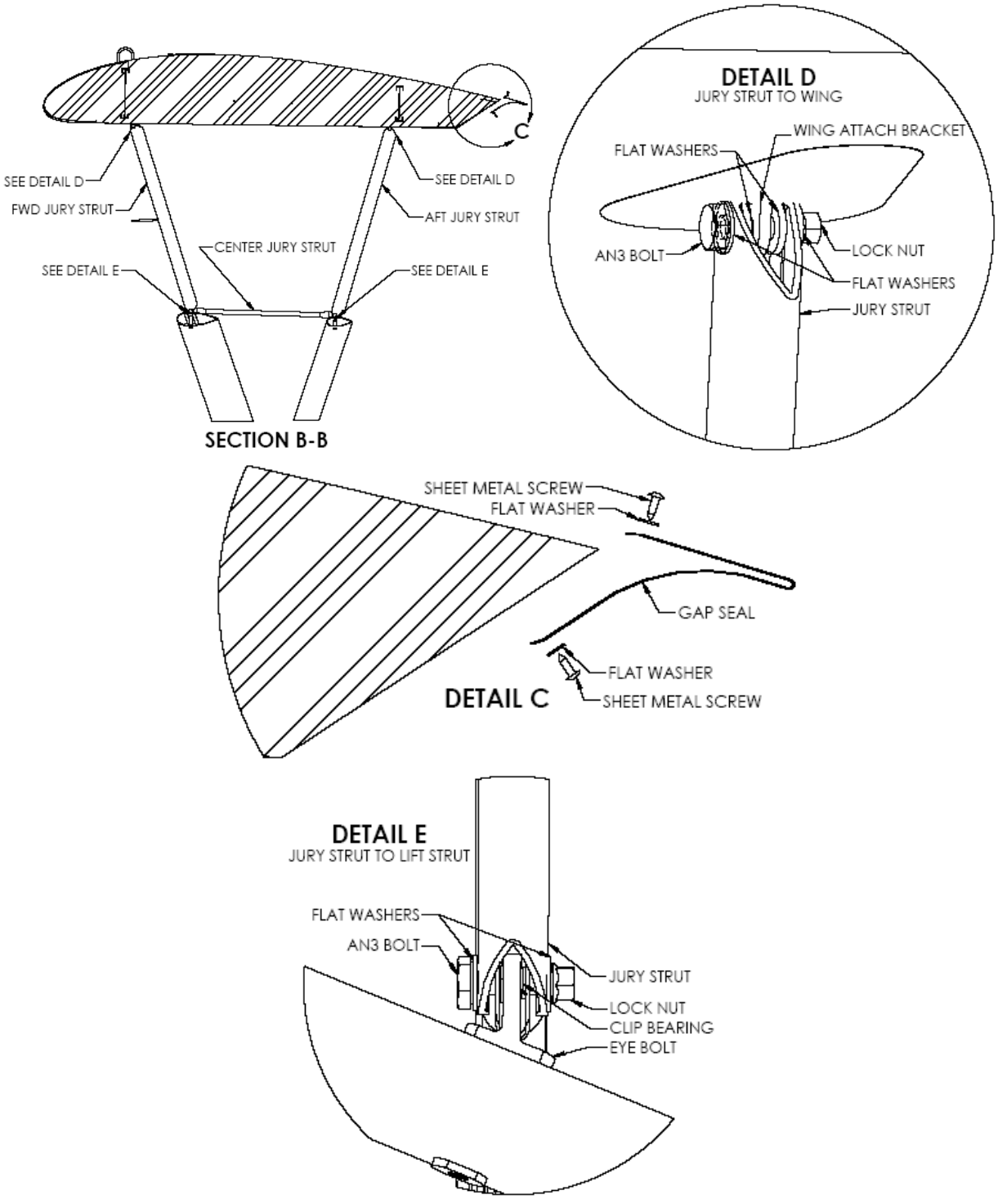

Figure 6.3.4.1: Wing Installation (Continued)

(1) REMOVAL

CAUTION
Before removing the wings, set the parking brakes and chock the wheels.

(a) Remove the front wing root, rear wing root, wing/root panel interface, skylight, and turtle deck.

(b) Drain the fuel tank(s). Disconnect the fuel supply and gauge lines inboard ends at the wing root. Cover all exposed ends of tubing and hoses with tape to prevent contamination of the fuel from dirt or debris.

(c) Disconnect the pitot air tube at the wing root (left side only).

(d) Disconnect the appropriate wiring, stall warning system, navigation, and landing light at the wing root butt splices.

(e) Remove the wing pulley inspection plate covers from the wing. Remove pulley and aileron upper cable attachment.

(f) Remove fairleads from wing strut. Disconnect the lower aileron control cables from the torque tube link on the below the control stick.

(g) If the wing or wings are to be fully removed, cut and remove the upper aileron crossover cable.

(h) Disconnect the flap control rod from the flap lever arm and flap. .

NOTE
The flaps and ailerons may be removed from the wings at this point.
See Section 6.3.6 Flight Controls.

(i) Unbolt and remove the jury strut braces. They are secured to the wing from the middle of the struts. Mark the struts LH and RH so they may be reinstalled in the same location.

CAUTION
To accomplish removal and installation of the wings, at least three people will be required.
Use one person to support the outboard portion of the wing and one person to support the inboard end while the third removes the attaching hardware.

(j) With a person holding the wing and one person holding the rear lift strut, remove the lower and upper rear lift strut bolts and separate the strut from the fuselage.

(k) Remove the nuts from the wing and strut attachment bolts.

(l) Remove the lower and upper front lift strut bolts and separate the strut from the fuselage.

(m) Remove the wing from the fuselage.

(n) Rest the wing on the leading edge using soft pads along the leading edge or place horizontally on padded sawhorses so as not to dent or damage the surfaces.

(o) Repeat the all the procedures on the opposite wing, if necessary.

(2) INSTALLATION

(a) Support the wing at the outboard end and at the wing root.

(b) Align the wing root attachment points with the fuselage attachment points and insert bullets. (It is easier to temporarily secure the wing with bullets of the same diameter as the bolts and then push the bullets out with the bolts.)

(c) Position the front strut fork on the fuselage attachment point and align the hole with a bullet.

(d) Align the top hole of the front strut with the wing attachment hole and secure with a bullet.

(e) Position the rear strut fork on the fuselage attachment point, align the hole with a bullet; align the top hole of the rear strut with the wing attachment point and secure with a bullet.

(f) Repeat the procedure on the opposite wing, if necessary.

(g) Apply a light coat of grease to the wing attachment bolts before installation.

(h) Press out the bullets at the wing to fuselage attachment points with the proper bolts. Secure the bolts using the appropriate washers and nuts. Torque the nuts to 160-200 in. lbs. (Refer to Section 5.2.8.)

(i) Press out the bullet at the wing to front strut attachment point with the proper bolt. Slide the spacer and pulley bracket over the end and secure the using the appropriate washer and nut. Torque to 160-200 in. lbs. (Refer to Section 5.2.8.)

(j) Press out the bullet at the wing to rear strut attachment point with the proper bolt. Secure using the appropriate washer and nut. Torque to 160-200 in. lbs. (Refer to Section 5.2.8.)

(k) Support the outboard end of the wing and remove the lower strut bullets. Insert the proper bolts. Torque the nut to 95 in. lbs, torque up to the nearest castellation, and safety with a cotter pin.

(l) Check the dihedral angle in accordance with Section B. Adjust if necessary.

(m) Check the wing washout in accordance with Section B. Adjust if necessary.

(n) Install the jury struts making sure the longer vertical tube is in front. Secure using the appropriate bolt, washer, and nut then torque the top bolt to 38-43 in. lbs, bottom bolt to 23-28 in. lbs.

(o) Install new aileron upper cable and install to aileron horns.

(p) Connect the flap to flap control rod. Connect the control arm to the flap handle lever. .

(q) Route the lower aileron cable down the strut.

(r) Install the associated pulley and fairleads. Make sure the cable is not hooked on a strut.

(s) Connect the lower aileron control cables to the torque tube link. Ensure that the nuts have the appropriate cotter pins.

(t) Connect the pitot air tube at the wing root. Reconnect the stall warning system, navigation, and landing light wires at the wing root.

(u) Remove the tape from the fuel line ends. Reconnect the fuel supply and gauge lines at the wing root. Torque the ¼ inch hose clamps to 10-14 in. lbs. Reconnect plastic fuel line fittings, torque to finger tight plus 1 ½- 2 additional revolutions.

(v) Ensure that the aileron cables are not rubbing or hung up. Check to verify the cable tension is 40 ± 5 lbs and, if needed, adjust in accordance with Section 6.3.6.3 Ailerons.

(w) Install the wing pulley inspection plate covers.

(x) Reinstall the front wing root, rear wing root, turtle deck, skylight, and wing/root panel interface.

2. RIGGING THE WINGS

(1) PREPARATION

The aircraft must be level longitudinally and laterally prior to setting or adjusting the dihedral or the washout angles. Refer to the leveling procedure described in Section 6.3.22.

(2) DIHEDRAL ANGLE

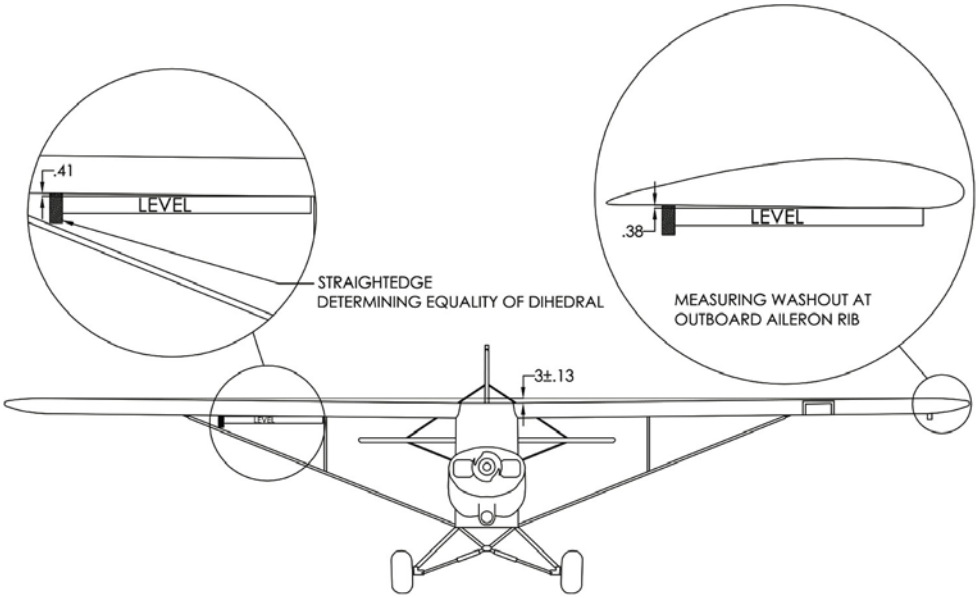

Figure 6.3.4.2: Dihedral Angle and Washout

(a) Remove the front wing root fairings.

(b) Stretch a string from wing tip to wing tip above the front spar and pull tight and secure.

(c) Measure down from the string to the top of the inboard edge of the front spar cap (Figure 6.3.4.2). The measurement should be 3 inches plus or minus 0.13 (1/8) inches. This adjustment is accomplished by turning the forks in or out. However, prior to making any adjustment, proceed to step (d) and (e).

(d) To determine that each wing panel has the same dihedral, hold a straightedge on the end of a 30-inch level so that one end of the straightedge protrudes 0.41 (13/32) of an inch above the level (see Figure 6.3.4.2). Place the level combination along the front spar bottom between the lift strut and jury strut

attachment fittings as illustrated in Figure 6.3.4.2. The bubble should be approximately centered. Check the opposite wing panel in the same manner.

(e) If the dihedral angle is not equal for both wing panels, adjust the threaded fork on the lower end of the front strut until the dihedral angle is the same. Recheck the total dihedral and readjust as necessary.

(f) Record the actual results in the aircraft logbook.

(3) WASHOUT ANGLE

(a) Check the washout of each wing by holding a straightedge on the end of a 30-inch level so that one end of the straightedge protrudes 0.38 (3/8) inches above the level (See Figure 6.3.4.2). Place this combination along the bottom surface of the full rib next to the outboard end of the aileron. The level end with straightedge space should fit to the rear of the rib while the other end of the level should be placed under the front spar.

(b) To obtain the proper washout, adjust the threaded fork at the lower end of the rear strut at the fuselage end until the bubble is centered.

(c) Repeat on the opposite wing if needed.

(d) Record the actual results in the aircraft logbook.

CAUTION
There should not be more than 15 threads exposed on the lift strut forks.

3. VORTEX GENERATORS

Each wing has 36 vortex generators on the top leading edge. The aircraft is allowed to fly with the following number of vortex generators missing:

- Not more than three vortex generators missing on an aircraft
- Not more than three vortex generators missing on a wing
- The missing vortex generators must not be next to each other

If a vortex generator should fall off, it must be glued on at the same location as follows:

(a) Ensure that the area where the vortex generator fell off it is dry and free of grease and dirt.

NOTE
If the color of the vortex generator does not match the aircraft, it is advisable to paint the exposed part of the vortex generator prior to installation.

(b) Clean the bottom surface of the vortex generator, removing any old adhesive.

(c) Mask off the rectangular footprint of the vortex generator.

(d) Reattach the vortex generator with Loctite Depend glue.

(e) Remove masking and wipe off excess glue with cleaner

4. MAINTENANCE

No major repair or alterations, as outlined in ASTM F2483, FAR 43, or in this manual are authorized at this time.

To obtain engineering approvals for any major repairs or alterations, please contact Cub Crafters at:

Cub Crafters, Inc.
1918 South 16th Avenue
Yakima, WA. 98903
Tel: 509-248-9491
support@cubcrafters.com

INTENTIONALLY LEFT BLANK

6.3.5 EMPENNAGE

TABLE OF CONTENTS

1. INSPECTION 2
(1) FUSELAGE 2
(2) TAIL SURFACES 2
2. RUDDER 3
(1) REMOVAL 3
(2) INSTALLATION 4
3. HORIZONTAL STABILIZERS AND ELEVATORS 5
(1) ELEVATOR REMOVAL 5
(2) HORIZONTAL STABILIZERS REMOVAL 6
(3) RIGHT HORIZONAL STABILIZER INSTALLATION 7
(4) LEFT HORIZONTAL STABILIZER INSTALLATION 9
(5) INSTALLING TAIL BRACE WIRES 10
(6) RIGGING THE TAIL BRACE WIRES 11
(7) ELEVATOR INSTALLATION 12
4. RIGGING THE TAIL CONTROL SURFACES 14
5. MAINTENANCE 14

1. INSPECTION

(1) FUSELAGE

(a) Visually inspect the fuselage longeron tubing and stringers for damage and corrosion.

(b) Inspect all pulleys, guides, and fairleads for damage, cracks, or misalignment.

(c) Check that the pulleys turn freely.

(d) Replace damaged pulleys that bind, and guides or fairleads that are cracked.

(e) Check all control cables for wear or corrosion.

(f) Inspect all turnbuckles and turnbuckle terminals for cracks, corrosion, improper safety, and freedom of movement.

(g) Damaged turnbuckles and control cables must be replaced.

(2) TAIL SURFACES

(a) Inspect the steel structure for damage or pitting from corrosion.

(b) Check the control surfaces for minor damage such as tears or holes in the fabric.

(c) Repair fabric in accordance with Section 6.4.

(d) Examine all drain holes. These must be kept open at all time so that accumulations of moisture will drain out of the control surfaces.

2. RUDDER

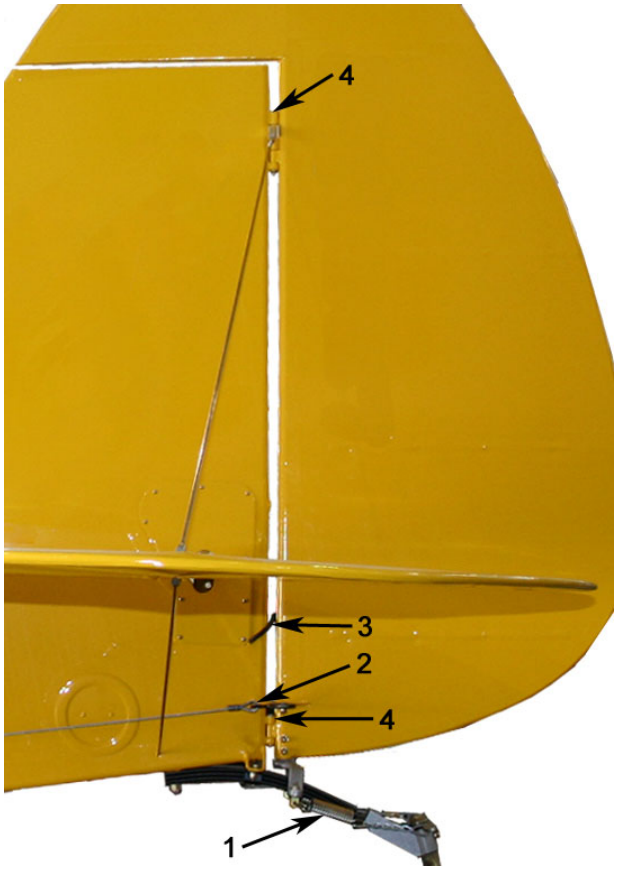

1 - Springs 2 - Cables 3 - Wiring 4 - Hinge pins

Figure 6.3.5.1 Rudder Installation

(1) REMOVAL

Refer to Figure 6.3.5.1

(a) Unhook the tail wheel steering springs (1) from the rudder arm.

(b) Disconnect the rudder cables (2) from the rudder horn.

(c) Remove the rectangular inspection cover and disconnect the electrical wiring to the tail assembly (3).

(d) Remove the hinge pins (4) and separate the rudder assembly from the fin.

(2) INSTALLATION

Figure 6.3.5.2 Installation of Clevis Pins at Rudder Hinges

(a) Position the rudder hinges inline with the hinges on the fin and fasten with two clevis pins, tail wire bracket, washers, and cotter pin (see Figure 6.3.5.2)

(b) Reconnect the electrical wiring to the lights in the light (3, Figure 6.3.5.1).

(c) Secure each rudder cable fitting (I, Figure 6.3.5.3) to a rudder horn with a screw (II, Figure 6.3.5.3), washer (III, Figure 6.3.5.3) and nut (IV, Figure 6.3.5.3). Make certain the connections pivot freely and that the rudder is centered when rudder pedals are inline with each other. Verify full rudder travel to the left and to the right can be obtained. Make any adjustments at the rear cable attach fitting (I, Figure 6.3.5.3) by changing the hole through which the screw (II, Figure 6.3.5.3) goes through the fitting (I, Figure 6.3.5.3). Safety each nut (IV, Figure 6.3.5.3) with a cotter pin (V, Figure 6.3.5.3).

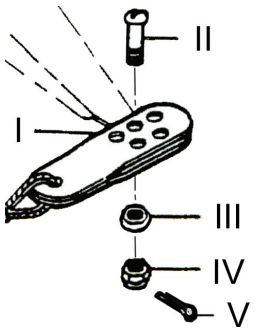

I - Cable Fitting
II - Clevis Screw
III - Thin Washer
IV - Castle Nut
V - Cotter Pin

Figure 6.3.5.3 Attachment of Rudder Cable Fitting

(d) Hook each tail wheel steering spring (1, Figure 6.3.5.1) to a rudder arm. Lubricate the hinge pins and pivot points with LPS-2 oil.

(e) Install the rectangular inspection cover.

3. HORIZONTAL STABILIZERS AND ELEVATORS

(1) ELEVATOR REMOVAL

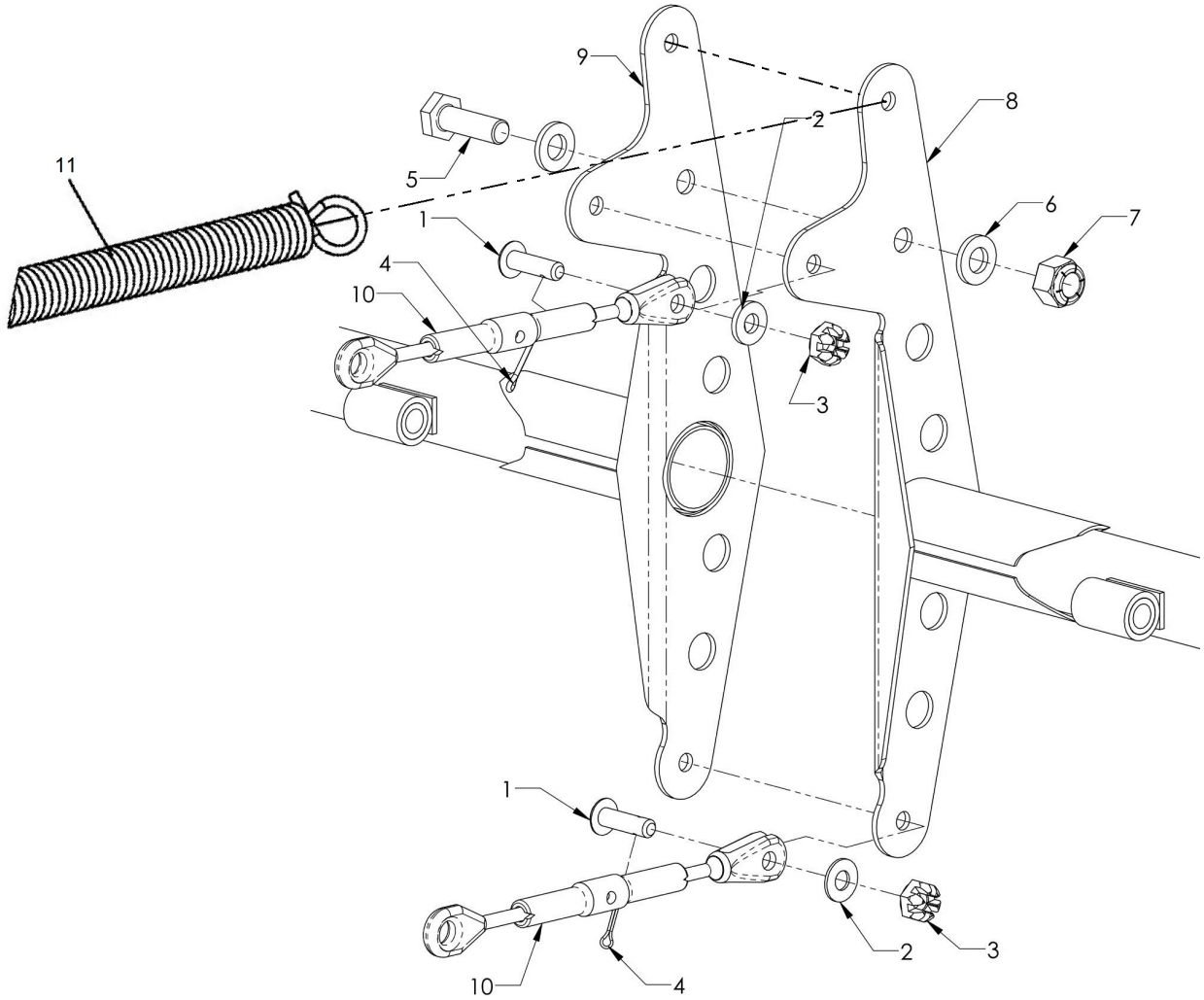

1 – Clevis Bolts 2 – Washers 3 – Castle Nuts
4 – Cotter Pins 5 – Bolt 6 – Washers
7 – Lock Nut 8 – Elevator Assembly – Left (Horn)
9 – Elevator Assembly – Right (Horn)
10 – Elevator Control Cable Connections
11– Spring

Figure 6.3.5.4 Elevator Horn Installation

Refer to Figure 6.3.5.4

(a) Remove left hand and right hand tail inspection covers.

(b) Remove the cotter pin (4), nut (3), and washer (2) on the top side of the elevator horns (8 & 9).

(c) Carefully remove the clevis bolt (1) to disconnect the upper elevator cable connection (10).

(d) Remove the cotter pin (4), nut (3), and washer (2) on the bottom side of the elevator horns (8 & 9).

(e) Carefully remove the clevis bolt (1) to disconnect the lower elevator cable connection (10).

(f) Remove the lock nut (7), washers (6), and bolt (5) and carefully separate the elevators from the stabilizer and fuselage.

(2) HORIZONTAL STABILIZERS REMOVAL

Figure 6.3.5.5 Tail Brace Wires and Elevator Attachment

(a) Unbolt the upper and lower tail brace wire assemblies.

(b) Unbolt the left stabilizer from the tubes and carefully pull it off.

(c) Carefully slide the right stabilizer, together with the tubes, out of the mounting points in the fuselage.

(3) RIGHT HORIZONAL STABILIZER INSTALLATION

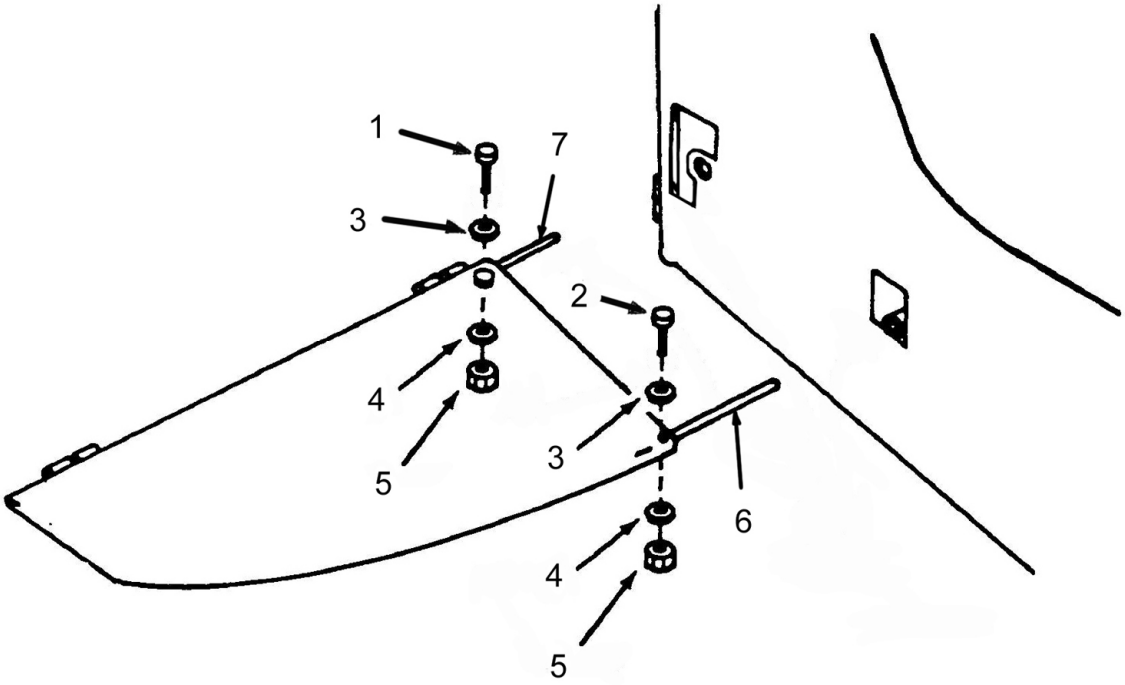

1 - Long Bolt
2 - Bolt
3 - Thin Washer
4 - Thick Washer
5 - Nut
6 - Front Stabilizer Tube
7 - Rear Stabilizer Tube

Figure 6.3.5.6 Horizontal Stabilizer Installation

Refer to Figure 6.3.5.6

(a) Identify the right stabilizer (note that the fabric seam should be on the bottom of the surface). Lay the stabilizer on a suitable work surface and apply a thin coat of grease (MIL-G-81322E) to the inside ends of the front and rear tubes.

(b) If the tail surfaces have been changed and new tubes are to be installed, complete the following steps;

- Make a line around the front stabilizer tube (6), 2-7/8 inches from one end with a fine tip felt pen.
- Make a line around the rear stabilizer tube (7), 2-1/2 inches from one end with a fine tip felt pen.
- Slide the front tube liner (6) into the end of the stabilizer until the marks are even with the end of the stabilizer tube.
- Drill a hole down through the topside of the stabilizer and tube with a #12 bit, using the predrilled hole in the stabilizer frame as a guide. DO NOT DRILL CLEAR THROUGH AT THIS TIME.
- Insert a short 3/16-inch bolt or cleco into each hole to hold the alignment and turn the stabilizer frame over. It may be necessary to hold the alignment bolt in place with tape.
- Drill a hole with a #12 bit through the stabilizer holes into the tube liners, remove the alignment bolts and drill clear through to "clean out" the holes.
- Repeat the same steps for the rear tube liner (7).

(c) Attach the front tube with a long bolt (1) and washer (3) inserted through the stabilizer and tube (6) and secure it with a washer (4) and nut (5). Torque the nut to 38-43 in. lbs.

(d) Attach the rear tube with a bolt (2) and washer (3) inserted through the stabilizer and tube and secure it with a washer (4) and nut (5). Torque the nut to 38-43 in. lbs.

(e) Apply a thin coat of grease (MIL-G-81322E) to the inside of the stabilizer attachment tubes on the airframe and slide the stabilizer on until it is tight against the mounting points.

(4) LEFT HORIZONTAL STABILIZER INSTALLATION

(a) Apply grease (MIL-G-81322E) to the inside of the front and rear tubes of the right stabilizer and install it onto the ends of the tubes that protrude from the side of the fuselage. It may be necessary to have a second person hold the left stabilizer as a back up.

(b) Make sure the sewn seams on the trailing edge of both stabilizers are on the bottom.

(c) Make sure the stabilizer frame fits tightly against the fuselage attachments.

(d) If the tail surfaces have been changed and new tube liners are installed complete the following;

- Have a second person pull the front corners of the stabilizer together tight against the fuselage attachment yoke then drill a hole down through predrilled hole in top of both front stabilizer tubes into the tube liner with a #12 bit.

DO NOT DRILL CLEAR THROUGH.

- Drill the holes up from the bottom through the stabilizer and liners and on up through the top to "clean out" the holes.

(e) Attach with a long bolt (1) and washer (3) inserted down through the stabilizer and tube (6) and secure it with a washer (4) and nut (5). Torque the nut to 38-43 in. lbs.

(f) Pump grease (MIL-G-81322E) into the stabilizer link assembly grease fittings (if equipped) until it starts to squeeze out.

(5) INSTALLING TAIL BRACE WIRES

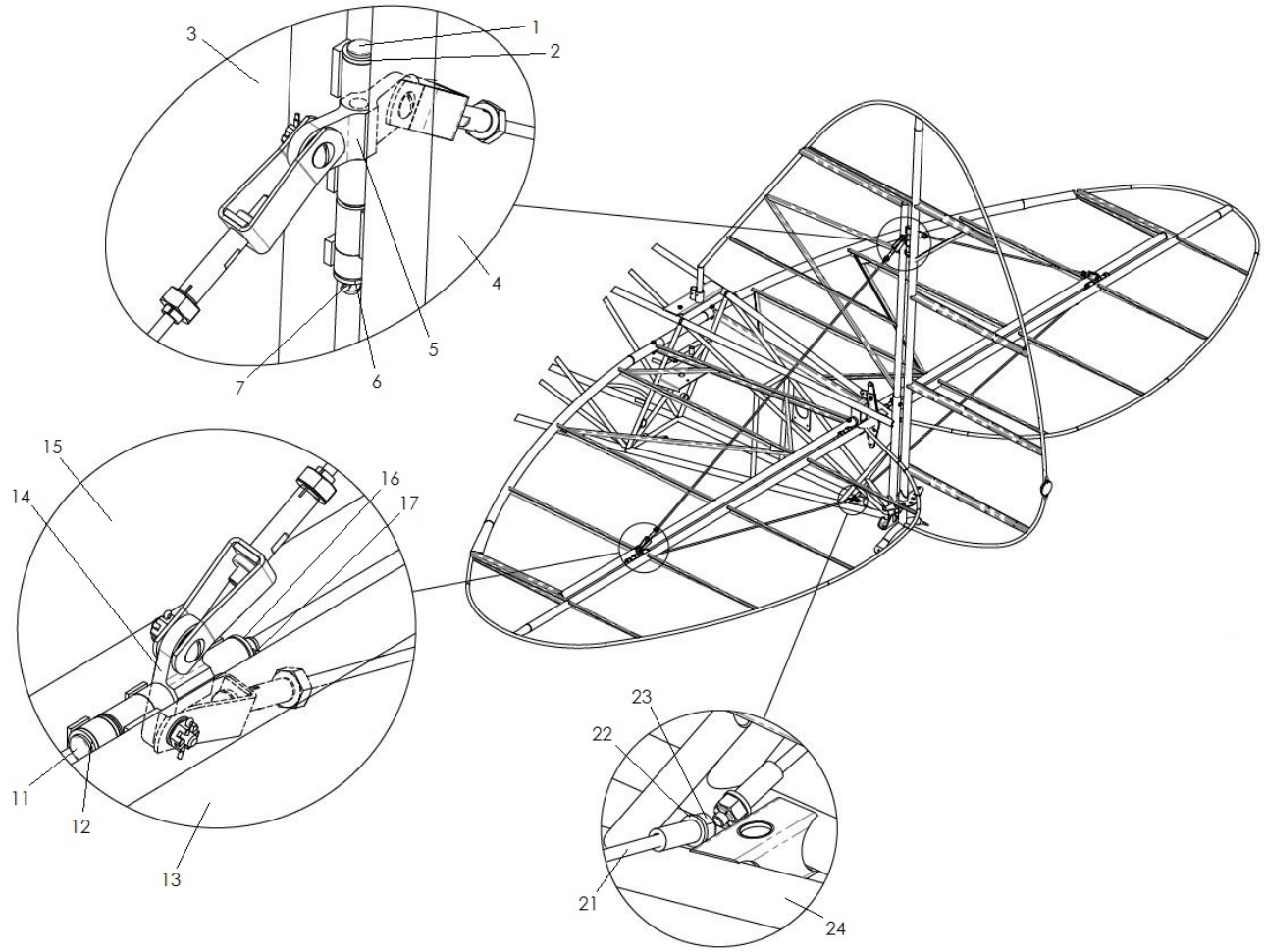

1 – Clevis Pin
2 – Washer
3 – Tail Fin
4 – Rudder
5 – Tail Wire Bracket
6 – Washer
7 – Cotter Pin
11 – Clevis Pin
12 – Washer
13 – Elevator
14 – Tail Wire Bracket
15 – Horizontal Stabilizer
16 – Washer
17 – Cotter Pin
21 – Tail Brace Wire
22 – Washer
23 - Nut
24 – Fuselage Lower Longeron

Figure 6.3.5.7 Tail Brace Wire Installation

Refer to Figure 6.3.5.7

(a) Set the tail of the aircraft on a sawhorse or a bench.

(b) Remove the inspection cover located on the left side of fuselage beneath the horizontal stabilizer.

(c) Position the long tail wires with the tail wire bracket (5) and insert a clevis pin (1) with washer (2) through the fin (3) and rudder (4). Secure with washer (6) and cotter pin (7).

(d) Position the long tail wires with the tail wire bracket (14) on the horizontal stabilizer (15) and insert a clevis pin (11) with washer (12) through the elevator (13). Secure with washer (16) and cotter pin (17).

(e) Repeat on the opposite side.

(f) Insert the short tail wire (21) through the fuselage longeron (24). Secure with a washer (22) and nut (23) and torque to 38-43 in.-lbs.

(6) RIGGING THE TAIL BRACE WIRES

(a) Level the aircraft per Section 6.3.22.

(b) Ensure that the horizontal stabilizers have been installed properly.

(c) Plumb the vertical fin at the rudder hinges. If the fin is not vertical, check that the aircraft is level. If the fin is still not vertical, adjust the tension of the top and/or bottom tail brace wires to ensure the stabilizers are level, and the fin is vertical.

(d) The tail brace wires must be tensioned in such a fashion to ensure that the horizontal stabilizers remain horizontal and the fin remains vertical.

- Level the stabilizer laterally at the rear spars by adjusting the bracing wires.
- Place elevator trim in the center of the takeoff position.
- Adjust the tension of the upper tail brace wires to obtain 7/16” to 9/16” (.44” to .56”) deflection when a load of 10 pounds plus or minus 0.5 pound is applied at right angles at the center of the wire.
- The rear spar of the stabilizer must be level; the elevator hinge line must remain straight. The tolerance is plus or minus 0.5 degrees.
- Ensure that the fin remains vertical at the rudder hinge center line and the rear spar straight. The tolerance is plus or minus 0.5 degrees.

(7) ELEVATOR INSTALLATION

(a) Identify which are the left and right elevators. The sewn seams are on the bottom trailing edge of each.

Figure 6.3.5.8 Clevis Pin Installation on Elevator

(b) Install each elevator onto the matching hinges on the stabilizers using clevis pins, tail wire brackets, with a washer at each end of every pin, and then secure each with a cotter pin. (Figure 6.3.5.8)

Refer to Figure 6.3.5.9

(c) Connect the elevator horns (8 & 9) to the stabilizer and fuselage, and secure with the bolt (5), washers (6) and lock nut (7) at the top of the horns.

(d) Attach the lower elevator cable connection (10) on the bottom of the elevator horns, and secure with the cotter pin (4), through the nut (3) with a washer (2). Tighten the nut finger tight temporarily.

(e) Repeat on the upper elevator cable connection (10). Torque the nut (7) to 38-43 in. lbs.

(f) Check to verify proper elevator movement and routing of cables.

(g) Safety each turnbuckle barrel with two wire lock clips, making sure that each clip end is locked in the hole. Alternatively, use the single wrap method with 0.032” stainless steel safety wire.

(h) Reattach the left hand and right hand tail inspection covers.

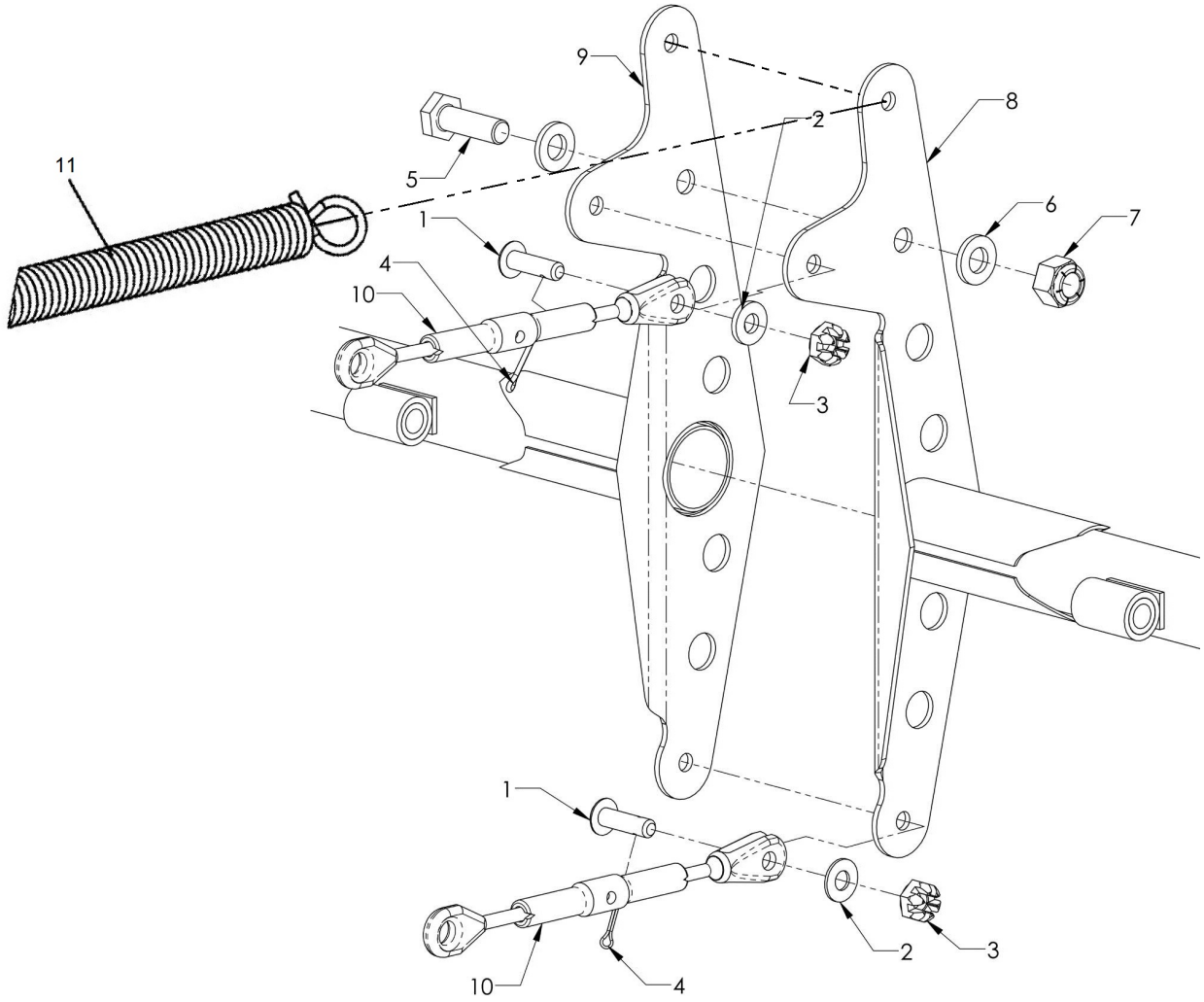

1 – Clevis Bolts 2 – Washers 3 – Castle Nuts
4 – Cotter Pins 5 – Bolt 6 – Washers
7 – Lock Nut 8 – Elevator Assembly – Left (Horn)
9 – Elevator Assembly – Right (Horn)
10 – Elevator Control Cable Connections
11– Spring

Figure 6.3.5.9 Elevator Horn Installation

4. RIGGING THE TAIL CONTROL SURFACES

Rig tail control surfaces per Section 6.3.6.

5. MAINTENANCE

No major repair or alterations, as outlined in ASTM F2483, FAR 43, or in this manual are authorized at this time.

To obtain engineering approvals for any major repairs or alterations, please contact Cub Crafters at:

Cub Crafters, Inc.
1918 South 16th Avenue
Yakima, WA. 98903

Tel: 509-248-9491

support@cubcrafters.com

6.3.6 FLIGHT CONTROLS

TABLE OF CONTENTS

1. GENERAL 2
2. TROUBLESHOOTING 2
3. HORIZONTAL STABILIZER TRIM 3
   (1) RIGGING 3
4. ELEVATORS 4
   (1) REMOVAL 4
   (2) INSTALLATION 4
   (3) RIGGING 4
5. RUDDER 5
   (1) REMOVAL 5
   (2) INSTALLATION 5
   (3) RIGGING 5
6. FLAPS 6
   (1) REMOVAL 6
   (2) INSTALLATION 7
   (3) RIGGING 8
7. FLAP HANDLE LOCK REPLACEMENT 10
   (1) REMOVE RETAINING HARDWARE 10
   (2) INSTALL NEW FLAP HANDLE LOCK 10
   (3) CHECK FLAP MOVEMENT 10
   (4) LUBRICATE 10
8. AILERONS 11
   (1) REMOVAL 11
   (2) INSTALLATION 11
   (3) RIGGING 13
9. MAINTENANCE 14

1. GENERAL

The control surfaces of the aircraft must be rigged within the prescribed limits in order to maintain adequate margins of safety. This section specifies the procedures that must be used to rig the flight control surfaces. The flight controls consist of horizontal stabilizer trim, elevators, rudder, flaps, and ailerons.

NOTE
Before rigging and setting control travels, verify that the aircraft is level (see Section 6.3.22), that the empennage has been rigged correctly (see Section 6.3.5), and that the dihedral and washout are correct (see Section 6.3.4).

2. TROUBLESHOOTING

PROBLEM	PROBABLE CAUSE	REMEDY
Control sticks are displaced when ailerons are in neutral	Control cables improperly rigged	Adjust control cables
Improper aileron travel	Control cables improperly rigged	Adjust control cables
	Torque tube incorrectly adjusted	Readjust torque tube
Lost motion in control sticks	Loose control cables	Take up slack on control cables
	Broken pulley	Replace broken pulley
	Worn holes in control stick stub or torque tube where they attach to each other	Replace worn control stick stub or torque tube
Excessive resistance to movement of control sticks	Control cables too taut	Adjust control cable tensions
	Pulleys binding	Replace damaged pulleys
Full elevator travel cannot be achieved	Pulleys binding	Replace damaged pulleys
Stabilizer does not move up or down when actuating the trim switch	Loose wiring	Secure wiring connections
	Broken switch	Replace switch
	Inoperative electric servo	Replace electric servo
Flaps do not move when flap control arm is actuated	Flap actuator tubes broken/disconnected	Replace/reconnect flap actuator tubes
Flap control arm cannot be actuated	Flap control arm release button not working properly	Repair release mechanism
Flaps do not move in unison	Flap actuator tube bent/misrigged	Replace/re-rig flap actuator arm
	Flap actuator tube rod end broken	Replace flap actuator tube rod end

PROBLEM	PROBABLE CAUSE	REMEDY
Flaps won't stay in position at second or third notch	Flap handle lock has been bent	Replace flap handle lock
Stall warning comes on well above stalling speed	Stall warning vane not calibrated properly	Calibrate stall warning vane
Stall warning does comes on at a speed less than 6 mph above the stall	Stall warning vane not calibrated properly	Calibrate stall warning vane
Stall warning does not work	Problem in the electric circuit, switches or horn	Inspect and replace or repair damaged components

3. HORIZONTAL STABILIZER TRIM

(1) RIGGING

(a) Use a straight edge long enough to rest on the forward and aft stabilizer spars, approximately 4" inboard from the first rib, parallel to the first rib (see Figure 6.3.6.1).

(b) Verify the digital level is zeroed with the horizontal reference line of the aircraft.

(c) Run the trim leading edge up to +2.5° and set stop.

(d) Run the trim leading edge down to -4° and set stop.

(e) Verify that jam nuts are torqued properly.

(f) Verify trim stops are correct and the trim system operates smoothly through the entire range without binding.

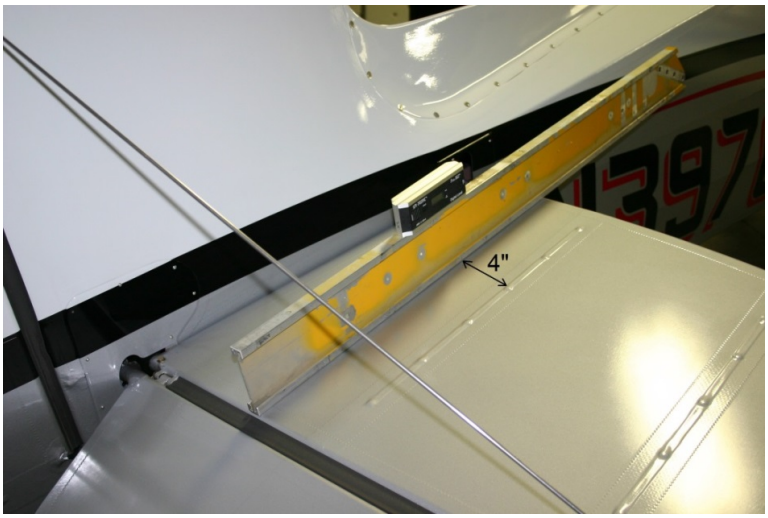

Figure 6.3.6.1 Horizontal Stabilizer Trim Rigging

4. ELEVATORS

(1) REMOVAL

See Section 6.3.5 for elevator removal.

(2) INSTALLATION

See Section 6.3.5 for elevator installation.

(3) RIGGING

(a) Use a straight edge long enough to rest on the forward and aft spars, approximately 4” inboard from the longest rib (see Figure 6.3.6.2).

(b) Verify the digital level is zeroed with the horizontal reference line of the aircraft.

(c) Using the pilot’s control stick, set the travel to the following specifications:

- Trailing Edge UP: +25° ±2°
- Trailing Edge DOWN: -15° ±2°

(d) Tighten jam nuts on elevator stops and verify travel is unchanged and unrestricted by deflecting elevator with control stick.

(e) Verify the front stick clears the instrument panel by at least 1/8” when the stick is moved all the way forward. Verify that the control link assembly clears the torque tube when the stick is moved all the way forward.

(f) With the forward seat all the way forward, verify the front stick clears the base of the seat by at least 1/8” when the stick is moved all the way aft.

(g) With the forward seat all the way back, verify that the rear stick clears the back of the forward seat by at least 1/8” when the stick is moved all the way forward.

(h) Verify the rear stick clears the rear seat bar when the stick is moved all the way aft.

(i) Verify elevator cable tension is 60 ± 2 lbs.

(j) Safety each turnbuckle barrel with 2 wire lock clips making sure the clip ends are locked in the hole. Alternatively use the single wrap method with .032 stainless safety wire.

Figure 6.3.6.2 Elevator Rigging

5. RUDDER

(1) REMOVAL

See Section 6.3.5 for elevator removal.

(2) INSTALLATION

See Section 6.3.5 for elevator installation.

(3) RIGGING

(a) Check that the rudder is centered when rudder pedals are in line with each other.

(b) File stops to provide proper rudder travel, ends shall be filed parallel to contacting surface of rudder horn. Ensure that the rudder can travel through its full range, left and right.

(c) Adjust rudder travel trailing edge RIGHT to +25º ± 2° as indicated. Be sure not to flex the rudder while deflecting.

(d) Adjust rudder travel trailing edge LEFT to -25º ± 2° as indicated. Be sure not to flex the rudder while deflecting.

(e) Make any adjustments at the rear cable attach fitting by placing the clevis screw through one of the other holes in the fitting. Safety each nut with a cotter pin. The same hole of the cable fitting must be used on both sides of the aircraft.

(f) Make sure all castellated nuts and clevis pins are secured with cotter pins.

(g) Verify full rudder and brake travel is unrestricted. Verify rudder and brake pedals cannot contact interior panels or structural tubes by firewall.

6. FLAPS

(1) REMOVAL

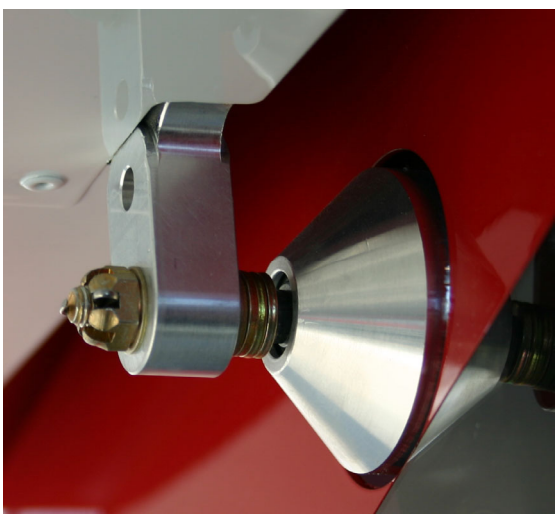

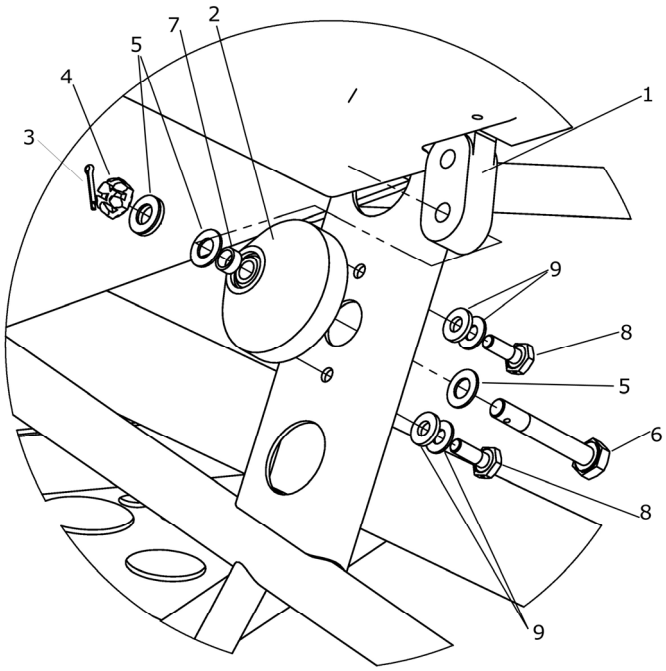

1 – Flap Hinge	2 – Flap Cone Assembly	3 – Cotter Pin
4 – Castle Nut	5 – Washer	6 – Bolt
7 – Steel Bushing	8 - Bolt	9 - Washers

Figure 6.3.6.3 Flap Hinge

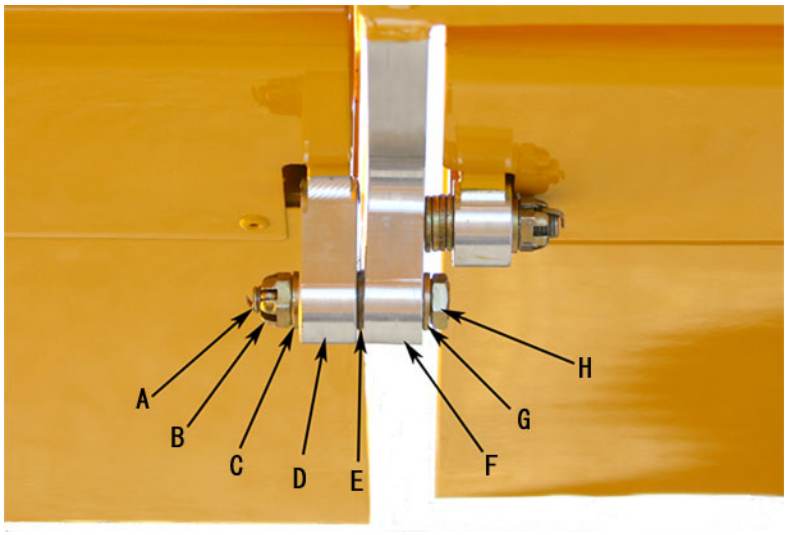

A – Cotter Pin
B – Castle Nut
C – Washer
D – Flap Hinge
E – Washer
F – Aileron Hinge
G – Washer
H – Bolt

Figure 6.3.6.4 Flap Hinge (continued)

Refer to Figures 6.3.6.3 and 6.3.6.4

(a) Remove the cotter pin (3) and nut (4) holding the bolt (6) on the flap cone (2) and flap hinge (1); keep the bolt (6) in place temporarily (see Figure 6.3.6.3).

(b) Remove the cotter pin (A) and nut (B) holding the bolt (H) on the flap hinge (D) and aileron hinge (F) (see Figure 6.3.6.4).

(c) Remove the outboard bolts first and carefully remove the flap by sliding it outboard.

(2) INSTALLATION

1- Inboard Hinge
2 - Outboard Hinge

Figure 6.3.6.5 Flap Installation

(a) Ensure the flap rod connection eye is installed on the flap.

(b) Using two people, slide flap inboard and onto the flap cone attach bolt. Install outboard attachment hardware.

Refer to Figure 6.3.6.3, Figure 6.3.6.4, and Figure 6.3.6.5.

(c) At the inboard hinge (1, Figure 6.3.6.5), install washers, nut and cotter pin (5, 4, and 3, Figure 6.3.6.3). Refer to Section 5.2 for torque value.

(d) At the outboard hinge (2, Figure 6.3.6.5), insert a washer and bolt (G and H, Figure 6.3.6.4), pointing inboard, through the flap hinge, aileron hinge (D and F, Figure 6.3.6.4) and washer (C, Figure 6.3.6.4); fill any gap between the hinges (D and F, Figure 6.3.6.4) with a thin or thick spacer washer (E, Figure 6.3.6.4) as necessary.

(e) Secure with a nut (B, Figure 6.3.6.4) and a cotter pin (A, Figure 6.3.6.4) snug nut to allow for proper flap and aileron function.

NOTE
It may be necessary to check the flap rigging depending on the parts that were removed.

(3) RIGGING

(a) Flaps should be in the LANDING (fully extended) position to start. Using cable ties, secure the flap handle to the fuselage top tubes against the stop while measuring position (see Figure 6.3.6.6). Level should be as close as possible to a flap rib while still clear of any rivets.

Figure 6.3.6.6 Flap Installation

(b) Flaps are to be adjusted by changing the length of the push-pull rod between the flap and flap handle bell crank. Adjust the flap such that the lower surface is 50.0° ± 3° relative to the horizontal reference line of the aircraft.

NOTE

The flap push/pull rod has opposite thread directions on either end, so length adjustments can be made simply by rotating the rod if the jam nuts are loosened.

(c) Verify flap deflection at two points along the flap to check for twist. The deflection at both points should be as follows:

- 0°
- 15° ± 3°
- 35° ± 3°
- 50° ± 3°

Ensure that the turtle deck is installed when checking the 0° position, as the turtle deck can affect the allowable retraction of the flap.

NOTE

Intermediate flap deflections are set by the flap ratchet and are not adjustable.

Figure 6.3.6.7 Flap Angle Measurement

(d) Tighten jam nuts on both ends of the flap control rod and verify cotter pins are installed on the bolts on both ends.

(e) Repeat steps for opposite side.

7. FLAP HANDLE LOCK REPLACEMENT

(1) REMOVE RETAINING HARDWARE

(2) INSTALL NEW FLAP HANDLE LOCK

(3) CHECK FLAP MOVEMENT

(a) Ensure all flap positions are obtainable and there is no restriction to free movement in the flap handle system.

(4) LUBRICATE

(a) Lubricate as required with LPS2 or white lithium grease.

Figure 6.3.6.8 Flap Handle Lock Replacement

8. AILERONS

(1) REMOVAL

Figure 6.3.6.9 Aileron Installation

Refer to Figure 6.3.6.9

(a) Disconnect both aileron control cables from the upper and lower aileron horns.

(b) Remove the bolts while firmly holding the aileron.

(c) Carefully remove the aileron from the wing panel.

(2) INSTALLATION

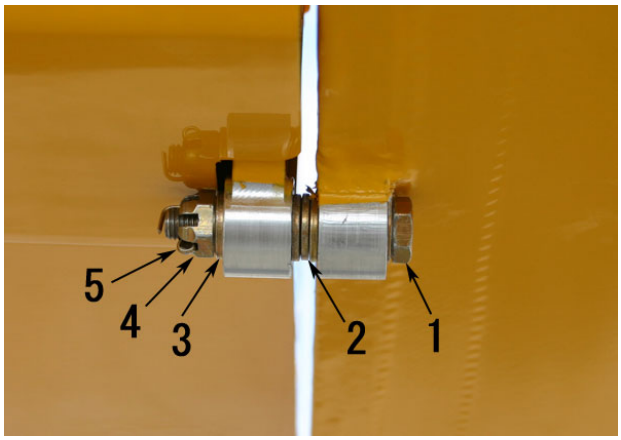

1- Bolt 2- Washers 3- Washer
4- Nut 5- Cotter Pin

Figure 6.3.6.10 Aileron Hinge

Refer to Figure 6.3.6.10

(a) Position the ailerons on the wing panels and secure with the bolts (1), washers (2 & 3), nuts (4) and cotter pins (5).

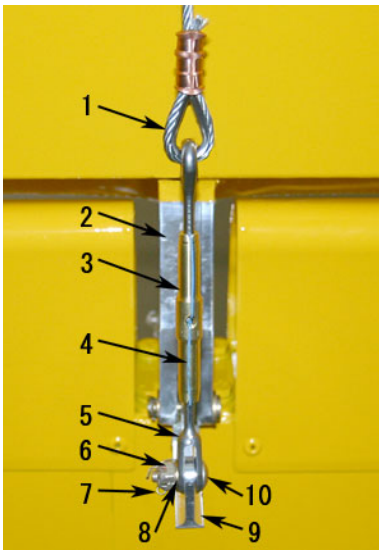

1 - Aileron Control Cable
2 – Hinge
3 – Turnbuckle Barrel
4 - Wire-Lock Clip
5 - Turnbuckle Fork
6 - Castle Nut
7 - Cotter Pin
8 - Thin Washer
9 – Hinge Arm
10 – Screw

Figure 6.3.6.11 Installation of Control Cable on Aileron Horn

Refer to Figure 6.3.6.11

(b) Attach each aileron control cable turnbuckle fork to the proper aileron horn with a screw (10), a thin washer (8), a nut (6) and a cotter pin (7).

(c) The aileron travel should be rigged for 18° ± 2° up or down (Refer to section 5.2).

(d) The cable tension must be 40 ± 5 lbs. Refer to the next section, if adjustment is needed.

(3) RIGGING

(a) Secure the flap handle so that it is pressed forward against the stop (see Figure 6.3.6.12). Ensure that the turtle deck is installed, as the turtle deck can affect the allowable retraction of the flap.

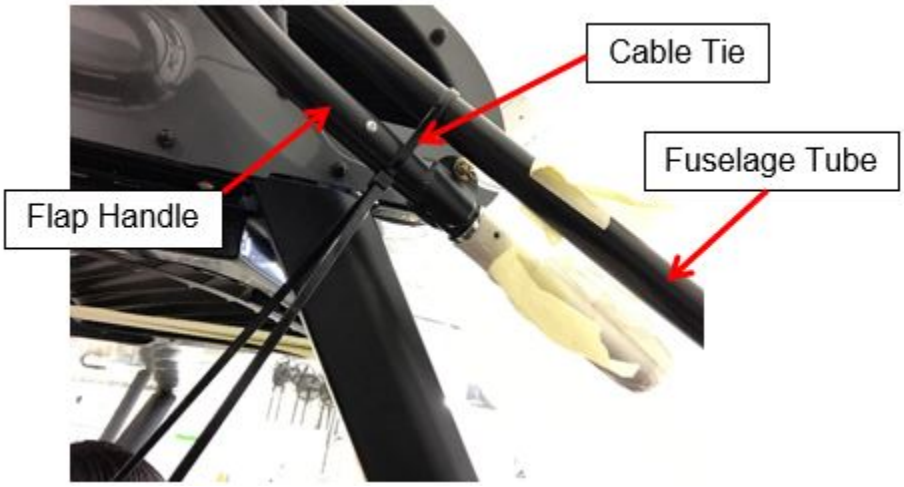

Figure 6.3.6.12 Flap Handle Secured

(b) Ensure that the control stick is vertical in the lateral (roll) sense.

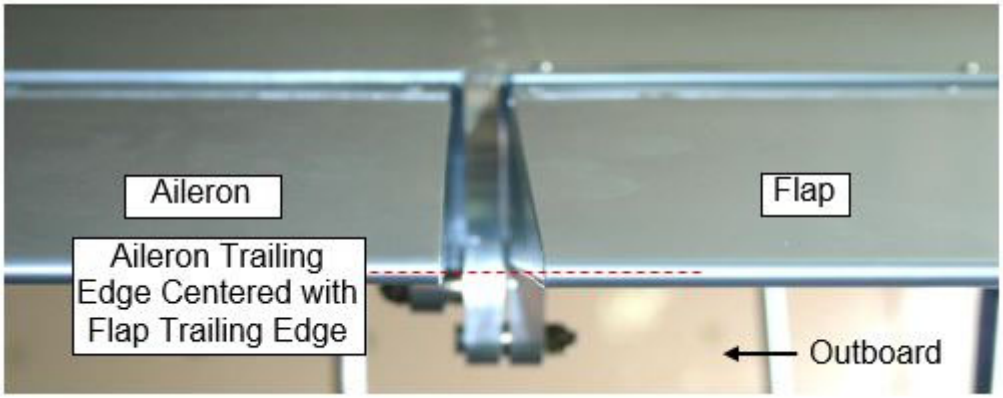

Figure 6.3.6.13 Aileron Rigging

(c) Adjust the aileron such that the trailing edge of the aileron is in-line with the trailing edge of the flap (see Figure 6.3.6.13).

- To raise the trailing edge of an aileron, tighten the turnbuckle at the upper aileron horn and simultaneously loosen the turnbuckle at the lower horn.
- To lower the trailing edge of an aileron, reverse the above procedure.

(d) Ensure that the cable tension is 40 ± 5.

(e) Safety each turnbuckle barrel with 2 wire lock clips making sure the clip ends are locked in the hole. Alternatively use the single wrap method with .032 stainless safety wire.

(f) Repeat for opposite side. Verify the control stick is neutral when ailerons are neutral. Verify correct cable tension. Verify that the system operates without binding.

(g) With the ailerons and stick at neutral. Center the aileron stop plate with the aft mast. Verify that the mast arm makes contact with the stop plate when the aileron is at the extent of its deflection (+18° ± 2° / -18° ± 2°).

9. MAINTENANCE

No major repair or alterations, as outlined in ASTM F2483, FAR 43, or in this manual are authorized at this time.

To obtain engineering approvals for any major repairs or alterations, please contact Cub Crafters at:

Cub Crafters, Inc.
1918 South 16th Avenue
Yakima, WA. 98903

Tel: 509-248-9491

support@cubcrafters.com

6.3.7 LANDING GEAR

TABLE OF CONTENTS

1 TROUBLESHOOTING....2
2 MAIN LANDING GEAR....5
2.1 BUNGEE ASSEMBLY....6
(1) REMOVAL....6
(2) INSPECTION....6
(3) INSTALLATION....7
2.2 LANDING GEAR LEG....8
(1) REMOVAL....8
(2) INSPECTION....8
(3) INSTALLATION....8
2.3 AOSS GEAR - OPTIONAL....9
3 TAIL LANDING GEAR....10
3.1 STANDARD STEERABLE TAIL WHEEL....10
(1) REMOVAL....10
(2) DISASSEMBLY....11
(3) CLEANING....11
(4) INSPECTION....12
(5) MINOR REPAIRS....12
(6) REPLACEMENT OF PARTS....12
(7) REASSEMBLY....12
(8) INSTALLATION....13
3.2 OPTIONAL 3200-TYPE STEERABLE TAIL WHEEL....14
(1) REMOVAL....14
(2) DISASSEMBLY....16
(3) CLEANING....17
(4) INSPECTION....17
(5) MINOR REPAIRS....17
(6) REPLACEMENT OF PARTS....17
(7) REASSEMBLY....18
(8) INSTALLATION....19
4 MAINTENANCE....19

1 TROUBLESHOOTING

PROBLEM	PROBABLE CAUSE	REMEDY
Landing gear sags	Bungees are no longer strong enough to return the landing gear to its stops	Replace bungee cords
Shocks bottom on landing	Inspect for weak bungee cords	Replace bungee cords
Tail Wheel does not respond to rudder pedal	Broken steering chains, links or springs	Replace defective steering chain, link, or spring
	Broken rudder control cables	Replace broken rudder control cables
Tail Wheel shimmies	Steering springs have weakened	Replace weakened steering springs
	Tire worn	Replace tire
	Spring / chain tension	Springs should neither be slack or in tension when wheel is centered
	Tail Wheel assembly has play or is loose	Ensure the tail wheel assembly is properly secured to the fuselage
	Tail Wheel assembled incorrectly	Remove tail wheel assembly, dismantle, clean, and reassemble
Tail Wheel does not swivel	Fork binds in bracket because of dirt or lack of lubricant	Disassemble, clean, reassemble, and lubricate
Tail Wheel does not absorb shock	Broken leaf spring	Replace leaf spring
	Tail Wheel tire over inflated (applicable to optional tail wheel only)	Reduce pressure to 38 psi.
Brakes drag	Pressure build up in system	Bleed off excess pressure
	Foreign matter wedged in brakes	Locate and remove
	Pistons cocked in cylinder	Inspect lining and/or disc for wear and replace as necessary
	Piston Does Not Retract	Remove Caliper and Inspect Piston O-Ring and Cylinder
	Back pressure due to malfunction of master cylinder or parking valve	Bleed hydraulic system and/or repair/replace master cylinder or parking valve
	Water or ice in hydraulic system	Flush and bleed hydraulic system (thaw ice first)

PROBLEM	PROBABLE CAUSE	REMEDY
Brakes drag (continued)	Bent or cracked torque plate	Replace
	Corroded anchor bolts and/or torque plate bushings	Clean and lubricate or replace
	Warped brake disc; inspect by laying a straight edge across disc face	Replace and use caution during operation to prevent excessive energy input into brake
	Out of position / stuck lining	Repair or replace
	Restriction in hydraulic line	Isolate and remove restriction
	Lining not firmly seated flush against pressure / back plate	Deburr rivet hole on surface adjacent to lining
Brakes inoperative	Brake fluid level low	Replenish brake fluid
	Air in brake system	Bleed brake system
	Worn brake linings	Replace linings
	Defective caliper	Replace caliper
	Defective master cylinder	Replace master cylinder
	Leaky brake line connections	Tighten or replace connectors
Parking brake inoperative	Parking brake valve defective	Replace valve
Unable to obtain sufficient hydraulic brake pressure, excessive toe pedal travel, or spongy pedal	Air in hydraulic system	Check for source, then bleed hydraulic system
	Leak in system; brake, master cylinder, fittings, or lines	Locate leak and repair
	Defective brake line (ballooning)	Replace
	Defective master cylinder	Replace or repair
	Back plate bolts loose or not properly torqued, causing excessive brake deflection	Torque bolts to proper value
	Excessive rusting, scoring, or pitting of brake disc	Clean or replace disc
	Excessive back plate deflection caused by bent bolts or over torquing bolts	Check and replace bolts
	Incorrect lining and/or disc	Replace with correct parts
	Defective caliper	Rebuild caliper
Rapid disc and lining wear	Excessive rusting, scoring, or pitting of brake disc	Clean or replace disc
	Excessive back plate deflection caused by bent bolts or over torquing bolts	Check and replace bolts

PROBLEM	PROBABLE CAUSE	REMEDY
Rapid disc and lining wear (continued)	Incorrect lining and/or disc	Replace with correct parts
Brakes will not hold	Lining worn below minimum wear limits	Replace linings
	Discs worn below minimum wear limits	Replace discs
	Contaminated lining	Replace lining
	New lining installed with old disc, lining not seated in wear track creating partial contact with disc	Replace excessively worn disc
	Brake lining plate installed backwards	Remove, inspect, and install

2 MAIN LANDING GEAR

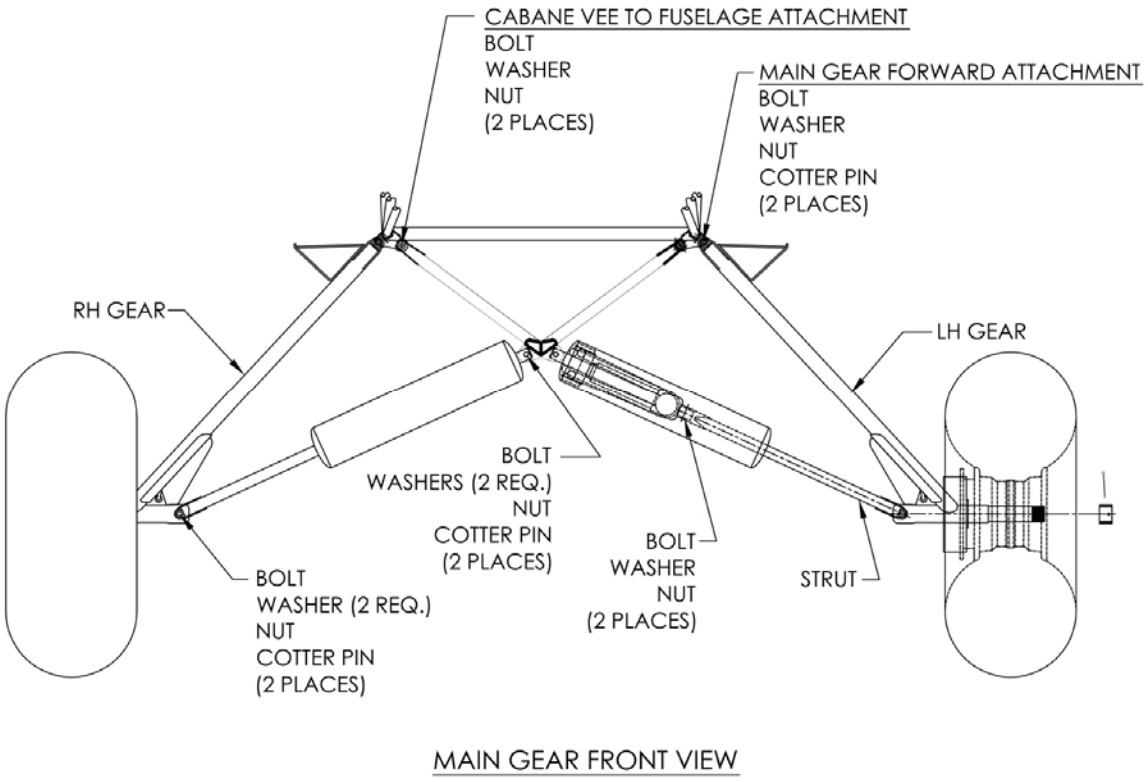

Figure 6.3.7.1: Main Landing Gear Arrangement

2.1 BUNGEE ASSEMBLY

(1) REMOVAL

(a) Chock the main wheel on the opposite side of the landing gear that is to be worked on. Chock the tail wheel. It is not recommended to carry this work out in windy conditions.

(b) Remove the top bungee cover screws and slide the cover down until the lower bungee bolt is exposed (the bungee cords can be inspected at this point and if replacement is required accomplish the following steps).

(c) Jack the aircraft by lifting the wing that is on the same side as the landing gear that is to be worked on. The jack is placed at the forward wing strut to spar attachment point on the desired side (see Section 5.3.2).

(d) Remove the upper shock assembly attach bolt and lower the shock assembly.

(e) Remove the bungee cover end from the shock assembly.

(f) Remove the lower attach bolt and pull the shock out of the strut.

(2) INSPECTION

(a) Check the bungee cords for broken bands, threads, and signs of weakness. Inspect the hydraulic strut for leaking fluid or damage.

NOTE
The bungees are replaced every five years (see Section 6.A).

(b) If the cords need replacement, contact Cub Crafters for further information.

(c) Replace any hardware that is excessively corroded or worn.

(3) INSTALLATION

(a) Insert the shock assembly in the strut. Insert a bolt with a washer through the shock and strut and place a washer and nut on the end of the bolt. Torque the nut to 160-200 in·lbs.

(b) Place the bungee cover end over the top shaft of the shock assembly. Align with the top shock hole and the holes in the cabane vee and insert bolt.

(c) Place the washer and the nut on the end of the bolt. Torque to 130 in·lbs. If necessary, tightened past this torque value to align the nut with the nearest hole in the bolt. Safety the nut with a new cotter pin.

(d) Verify that all hardware is installed properly then lower the aircraft back to the ground.

2.2 LANDING GEAR LEG

(1) REMOVAL

(a) Chock the main wheel on the opposite side of the landing gear that is to be worked on. Chock the tail wheel. It is recommended to carry this work in a sheltered hangar.

(b) Disconnect the brake line from the fuselage.

(c) Jack the aircraft by lifting the wing that is on the same side as the landing gear that is to be removed. The jack is placed at the forward wing strut to spar attachment point on the desired side.

(d) Remove the lower shock strut attach bolt.

(e) Remove both upper landing gear bolts.

(2) INSPECTION

(a) Inspect the landing gear and fuselage attachment points for cracks, damage, and oversized holes.

(b) Replace or repair affected parts.

(c) Inspect the brake backing plates for cracks or excessive wear.

(3) INSTALLATION

(a) Replace any hardware that is excessively corroded or worn.

(b) Align the upper landing gear attachment holes with the corresponding ones in the fuselage.

(c) If there is a gap between a landing gear leg and the corresponding fuselage ear, fill the gap with washers of the appropriate thickness.

(d) Apply grease to slow corrosion and insert the upper landing gear bolts.

(e) The rear bolt on the right landing gear is longer than the one on the left because the ear of the passenger step must be placed over the bolt end.

(f) Place washers and nuts on the end of the bolts.

(g) Align the hole at the bottom of the shock strut with the holes in the landing gear.

(h) Apply grease to slow corrosion and insert the bolt with a washer under the head. Place washer and nut on the end of the bolt.

(i) Torque all nuts to 130 in-lbs or if necessary, past this value so that the nuts may be aligned with the nearest hole on the corresponding bolt.

(j) Safety the nuts with new cotter pins.

(k) Verify that all the hardware is installed properly and lower the aircraft to the ground.

(l) Reconnect the brake lines and tighten the fittings.

(m) Service the brakes, if needed, to obtain the proper pedal travel (see Section 6.3.8).

2.3 AOSS GEAR - OPTIONAL

(1) See Manufacturer's Maintenance Manual and other documentation.

3 TAIL LANDING GEAR

3.1 STANDARD STEERABLE TAIL WHEEL

(1) REMOVAL

i - Nut	ii - Washer (4)	iii - Long Bolt
iv - Clamp	v - Small Nut (2)	vi - Small Washer (2)
vii - Small Bolt (2)	viii - Large Area Nut	ix - Bolt
x – Bushing		

Figure 6.3.7.2: Standard Tail Wheel and Leaf Spring Installation

(a) Lift the tail section of the airplane and rest the fuselage on a bench so the tail landing gear clears the ground.

(b) Disconnect the chain links from the tail wheel arms.

(c) Remove the front tail spring attach nut (i) and washer (ii).

(d) Disconnect the tail spring clamp (iv) by removing the nuts (v), washers (vi) and bolts (vii).

(e) To separate the springs from the tail wheel, remove the large area nuts (viii), washers (ii), and bolts (x).

(2) DISASSEMBLY

Figure 6.3.7.3: Standard Tail Wheel Assembly

(a) Remove the tire assembly from the fork by removing the nut and sliding the axle out.

(b) Disengage the arm assembly, washers, and nut from the fork and bracket.

(3) CLEANING

Clean all metal parts (including the bearings) in a cleaning solution. Dry all parts with compressed air.

(4) INSPECTION

See Figure 6.3.7.3

(a) Check the leaf springs for damage or twisting.

(b) Replace if condition dictates.

(c) Inspect the arm assembly, fork, and bracket for excessive wear, cracks or other damage. Replace damaged parts.

(d) Examine the washers for wear, scoring, or other damage. Replace if necessary.

(e) Inspect the bearing and races for wear or damage. Replace if necessary.

(5) MINOR REPAIRS

See Figure 6.3.7.3

The components that make up the tail wheel assembly may not be repaired except that minor realignments are permitted, such as minor dents and bends.

(6) REPLACEMENT OF PARTS

Replace all nuts that have been removed with new nuts.

(7) REASSEMBLY

See Figure 6.3.7.3

(a) Hand apply grease to all internal parts and pack the bearing (15) with grease (MIL-G-81322E).

(b) Place the arm assembly and washers on the fork and secure with the nut.

(c) These last steps may be accomplished once the tail wheel assembly is installed back on the fuselage.

(d) Check to verify proper tail wheel pivoting and tension.

(e) Install the tire assembly on the fork by sliding the axle through the fork and tire assembly.

(f) Secure with the nut.

(g) Pump the tail wheel bracket assembly and axle full of grease (MIL-G-81322E) then wipe off the excess.

(8) INSTALLATION

See Figure 6.3.7.2

(a) Position the tail wheel springs on the fuselage with long bolt (iii) and hold in place with a washer (ii) and a nut (i).

(b) Install the small bolts (vii), clamp (iv), and small washers (vi) with the small nuts (v) only finger tight.

(c) Insert the bushings (x) into the tail wheel assembly, if they were removed.

(d) Insert the bolts (ix) through the bushings and tail wheel assembly.

(e) Hold in place with two washers (ii) and two large area nuts (viii).

(f) Tighten the large area nuts (viii) to 270-300 in-lbs.

(g) Tighten the nut (i) to 270-300 in-lbs.

(h) Tighten the small nuts (v) to 70-100 in-lbs.

(i) Reconnect the chain links to the tail wheel arms. The springs and chains should neither be slack nor have tension when the wheel is centered. It may be necessary to adjust the number of chain links to achieve this.

(j) Lower the tail section to the ground.

3.2 OPTIONAL 3200-TYPE STEERABLE TAIL WHEEL

(1) REMOVAL

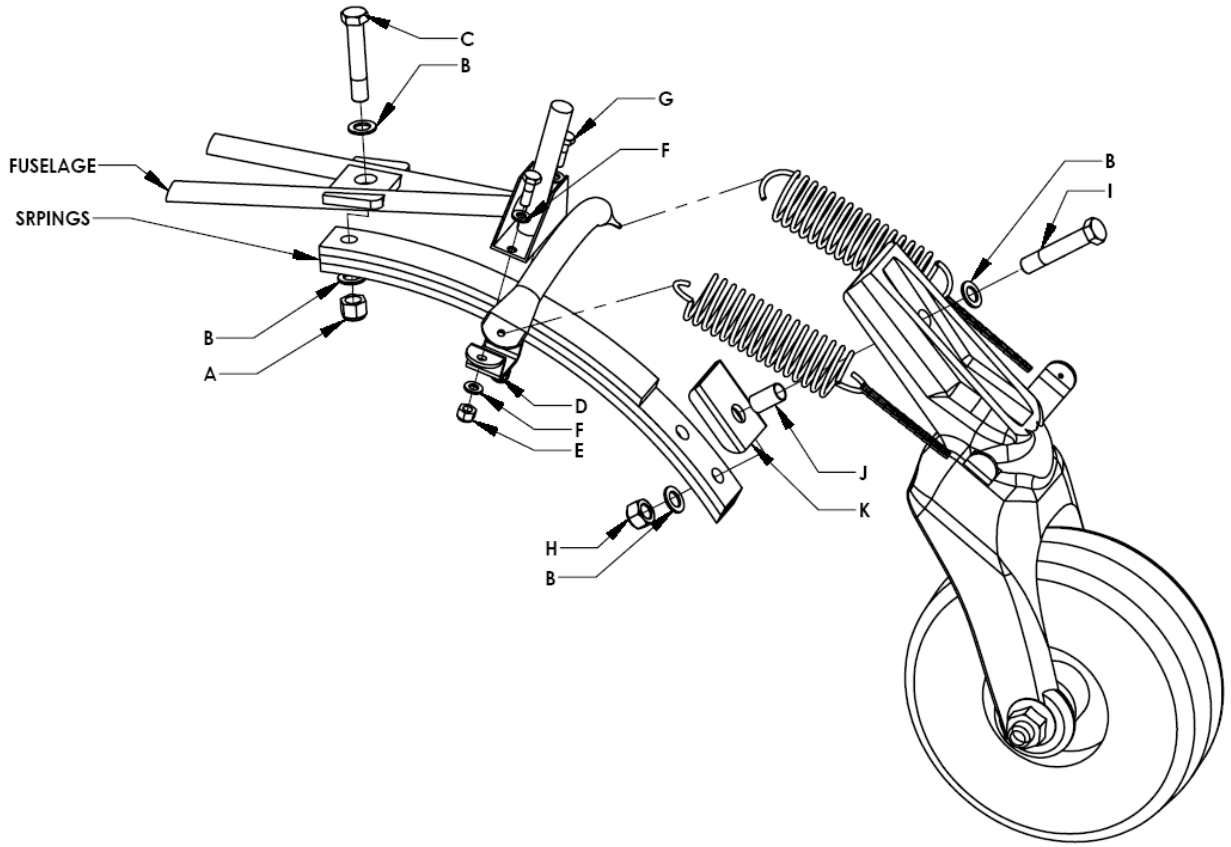

A - Nut	B - Washer	C - Long Bolt
D - Clamp	E - Small Nut	F - Small Washer
G - Small Bolt	H - Large Area Nut	I - Bolt
J - Bushing	K – Adapter Plate	

Figure 6.3.7.4: 3200-Type Tail Wheel and Leaf Spring Installation

(a) Lift the tail section of the airplane and rest the fuselage on a bench so the tail landing gear clears the ground.

(b) Disconnect the chain links from the tail wheel arms.

(c) Remove the front tail spring attach nut (A) and washer (B).

(d) Disconnect the tail spring clamp (D) by removing the nuts (E), washers (F) and bolts (G).

(e) To separate the springs from the tail wheel, remove the large area nut (H), washers (B), and bolt (I).

(2) DISASSEMBLY

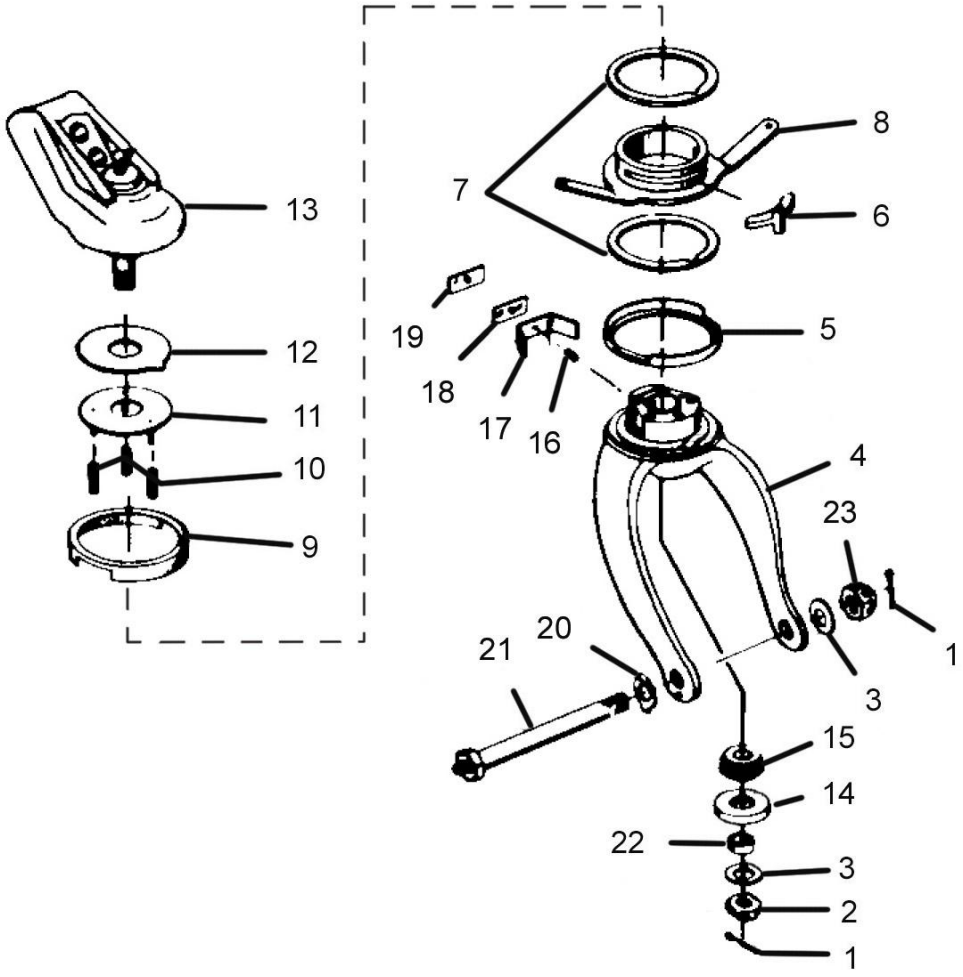

1 - Cotter Pin	2 - Short Castle Nut	3 - Washer
4 - Fork Assy.	5 - Lower Dust Cap	6 – Pawl
7 - Thrust Washer	8 - Arm Assy.	9- Upper Dust Cap
10 - Springs	11 - Thrust Plate	12 - Fiber Thrust Plate
13 - Bracket Assy.	14 - Grease Retainer	15 - Bearing
16 - Pin	17 - Flat Spring	18 - Shim
19 - Shim	20 - Lock Washer	21 - Axle
22 - Spacer	23 - Castle Nut	

Figure 6.3.7.5: 3200-Type Tail Wheel Assembly

(a) Remove the tire assembly from the fork by removing the cotter pin (1), castle nut (23), and washer (3) then sliding the axle (21) out.

(b) At the bottom of the fork (4) remove the cotter pin (1), short castle nut (2), and washer (3). Carefully pull the fork (11) off of the bracket (1).

(c) Separate the spacer (22), grease retainer (14), and the bearing (15) from the fork (4).

(d) Disengage the lower dust cap (5), thrust washer (7), arm assembly (8), thrust washer (7), pawl (6), upper dust cap (9), springs (10), thrust plate (11), and fiber thrust plate (12) from the fork (4) and bracket (13).

(3) CLEANING

Clean all metal parts (including the bearings) in a cleaning solution. Dry all parts with compressed air.

(4) INSPECTION

See Figure 6.3.7.4 and Figure 6.3.7.5

(a) Check the leaf springs for damage or twisting. (Figure 6.3.7.4)

(b) Replace if condition dictates.

(c) Inspect the arm assembly (8, Figure 6.3.7.5), flat spring (17, Figure 6.3.7.5), fork (4, Figure 6.3.7.5), and bracket (13, Figure 6.3.7.5) for excessive wear, cracks or other damage. Replace damaged parts.

(d) Examine the thrust washers (7, Figure 6.3.7.5) for wear, scoring, or other damage. Replace if necessary.

(e) Inspect the bearing (15, Figure 6.3.7.5) and races for wear or damage. Replace if necessary.

(5) MINOR REPAIRS

See Figure 6.3.7.5

The components that make up the tail wheel assembly may not be repaired except that minor realignments are permitted, such as minor dents and bends.

(6) REPLACEMENT OF PARTS

Replace all cotter pins that have been removed with new cotter pins.

(7) REASSEMBLY

See Figure 6.3.7.5

(a) Hand apply grease to all internal parts and pack the bearing (15) with grease (MIL-G-81322E).

(b) Place the lower dust cap (5) on the fork (4) and the thrust washer (7) on the fork (4) being sure to align the notch with the locking pin in the fork (4).

(c) Position the pawl (6) on the arm (8) with the longest lobe down and place the arm assembly (8) on the fork (4).

(d) Position the other thrust washer (7) and the upper dust cap (9) on the arm assembly (8).

(e) Insert 3 springs (10) in the proper holes on the top of the fork (4) so the thrust plate (11) can be placed on top.

(f) Position the fiber thrust plate (12) in the bracket (13) so the nub is aligned with the groove and insert the bracket assembly (13) into the fork (4) maintaining the alignment of all the interlocking parts.

(g) Place the bearing (15), grease retainer (14), spacer (22), and washer (3) in the fork (4). Exert pressure on the bracket (13) to engage the short castle nut (2) with the bracket assembly post.

(h) Tighten the nut (2) securely, back off to the first cotter pin hole in the bracket post, and secure with a cotter pin (1). These last steps may be accomplished once the tail wheel assembly is installed back on the fuselage.

(i) Check to verify proper tail wheel pivoting and tension.

(j) Install the tire assembly on the fork by sliding the axle (21) with the lock washer (20) through the fork and tire assembly.

(k) Secure with a washer (3) and castle nut (23). Tighten the nut until there is no free play in the bearings and there is a slight amount of friction. Safety with a cotter pin (1).

(l) Pump the tail wheel bracket assembly (13) and axle (21) full of grease (MIL-G-81322E) then wipe off the excess.

(8) INSTALLATION

See Figure 6.3.7.4

(a) Position the tail wheel springs on the fuselage with long bolt (C) and hold in place with a washer (B) and a nut (A).

(b) Install the small bolts (G), clamp (D), and small washers (F) with the small nuts (E) only finger tight.

(c) Insert the bushing (J) into the tail wheel assembly, if they were removed.

(d) Insert the bolt (I) through the bushings and tail wheel assembly.

(e) Hold in place with washer (B) and large area nut (H).

(f) Tighten the large area nut (H) to 270-300 in-lbs.

(g) Tighten the nut (A) to 270-300 in-lbs.

(h) Tighten the small nuts (E) to 70-100 in-lbs.

(i) Reconnect the chain links to the tail wheel arms. The springs and chains should neither be slack nor have tension when the wheel is centered. It may be necessary to adjust the number of chain links to achieve this.

(j) Lower the tail section to the ground.

4 MAINTENANCE

No major repair or alterations, as outlined in ASTM F2483, FAR 43, or in this manual are authorized at this time.

To obtain engineering approvals for any major repairs or alterations, please contact Cub Crafters at:

Cub Crafters, Inc.
1918 South 16th Avenue
Yakima, WA. 98903
Tel: 509-248-9491
support@cubcrafters.com

INTENTIONALLY LEFT BLANK

6.3.8 WHEEL AND BRAKE ASSEMBLIES

TABLE OF CONTENTS

1 MAIN WHEELS....2
(1) REMOVAL....2
(2) WHEEL DISASSEMBLY....2
(3) INSPECTION....4
(4) WHEEL ASSEMBLY....5
(5) MAIN WHEEL INSTALLATION....5
2 TAIL WHEEL....6
2.1 STANDARD WHEEL....6
2.2 3200-TYPE WHEEL....6
(1) DISASSEMBLY....7
(2) INSPECTION....7
(6) REASSEMBLY....8
3 BRAKE CALIPERS....9
(1) REMOVAL....10
(2) INSPECTION....10
(3) INSTALLATION....10
4 MASTER CYLINDER AND PARKING BRAKE VALVE....11
(1) REMOVAL....12
(2) INSPECTION....12
(3) INSTALLATION....12
5 MAINTENANCE....13

1 MAIN WHEELS

(1) REMOVAL

(a) Chock the main wheel on the opposite side of the landing gear that is to be worked on. Chock the tail wheel. It is not recommended to carry this work outside in windy conditions.

(b) Remove the hubcap and the axle nut cotter pin.

(c) Cut the safety wire and remove the brake back plate bolts.

(d) Place a jack under the axle and raise the tire off the ground (See Section 6.2.4.2).

(e) Remove the axle nut and wheel.

(f) The bearings can be removed, cleaned and inspected without disassembling the wheel and removing the tire.

(2) WHEEL DISASSEMBLY

See Figure 6.3.8.1

CAUTION
Care must be taken to avoid damaging wheel halves when breaking tire beads loose.

WARNING
DO NOT ATTEMPT TO REMOVE VALVE CORE UNTIL TIRE HAS BEEN COMPLETELY DEFLATED. THE VALVE CORE WILL BE EJECTED AT A HIGH VELOCITY IF IT IS UNSCREWED BEFORE THE AIR PRESSURE HAS BEEN RELEASED.

WARNING
INJURY CAN RESULT WHEN ATTEMPTING TO SEPARATE WHEEL HALVES WITH THE TUBE INFLATED.

(a) Deflate the tire.

(b) Break the tire bead loose from the wheel.

(c) Remove the wheel nuts (6) and washers (5).

(d) Pull the wheel halves (1, 3) apart being careful with the tubes valve stem.

(e) Remove the snap ring (11), grease seals (8, 9) and bearing (2). Repeat on other wheel half.

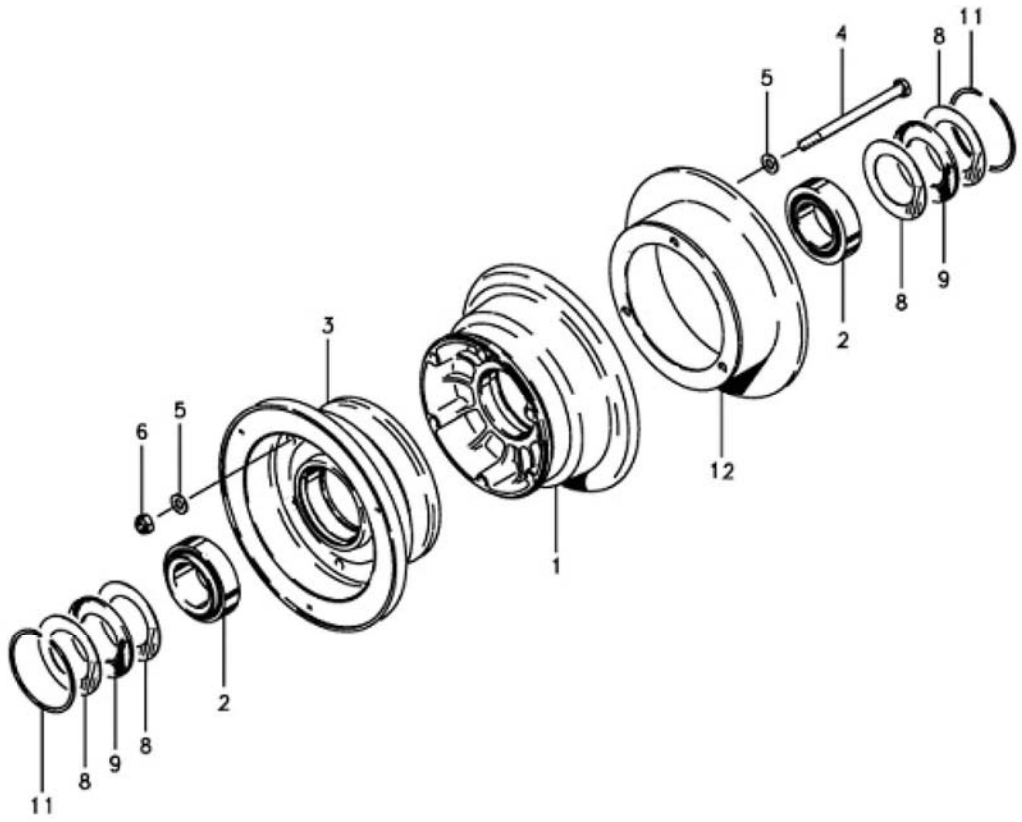

1 - Inner Wheel Half	2 - Bearing	3 - Outer Wheel Half
4 - Bolt (3)	5 - Washer (6)	6 - Nut (3)
7 - Tire	8 - Grease Seal Ring (4)	9 - Grease Seal Felt (2)
10 - Tube	11 - Snap Ring	12 - Brake Disc

Figure 6.3.8.1: Wheel

(3) INSPECTION

(a) Axle

- Visually inspect the axle to make sure there are no cracks or grooves.

(b) Tire and Tube

- Visually inspect the tires inside and outside for cuts, uneven or excessive wear, and penetration by foreign objects.
- Visually inspect the inner tube for wear, cuts or cracks. Pay close attention to the valve stem base.
- The tire should be removed when the tread is worn to the base of a groove. Tires with wear through the top fabric layer can only remain in service long enough to return to a maintenance base to be replaced.

(c) Wheel Halves

- Inspect the wheel halves for cracks or corrosion.

(d) Discs

- Inspect the brake disc attachment points for cracking or distortion.
- New disc thickness is .190, minimum disc thickness is 0.170 in.

(e) Bearings

- Clean all metal parts (including the bearings) in a cleaning solution. Dry all parts with compressed air.
- Inspect the bearing and races for wear or damage. Replace if necessary.

(f) Replace unserviceable parts as required.

(4) WHEEL ASSEMBLY

(a) If a new tire or tube is used or the old one is sticky, dust the inside of the tire lightly with talcum powder.

(b) Inflate the tube, inside the tire, with enough air to start to fill it out so it will not be pinched between the wheel halves.

(c) Insert the outboard wheel half (1) over the valve stem and into the tire.

(d) Mount the inner wheel half (1) onto the outer wheel half (3).

(e) Secure the brake disc (12) using three bolts (4) with a washer (5) under each head.

(f) Place a washer (5) and nut (6) on each bolt (4) and torque to 85-95 in-lbs.

(g) Refer to Section 6.2 for proper tire inflation.

(h) Allow time for the air trapped between the tube and tire to escape and recheck the pressure.

(i) Pack the bearings with grease (MIL-G-81322E).

(j) Insert the bearing (4), inner grease seal ring (8), grease seal felt (9), outer grease seal ring (8) and secure with a snap ring (11). Repeat on the opposite side.

(5) MAIN WHEEL INSTALLATION

(a) Place the wheel on axle and tighten the axle nut so the tire will turn 1 ½ -2 times after a good spin.

(b) Safety with a cotter pin.

(c) Verify the tire pressure (Section 6.2).

(d) Safety the axle nut with a cotter pin. Verify before attaching the hubcaps.

(e) Position the brake back plates, insert the bolts, and torque to 65-75 in-lbs.

(f) Safety the bolts in pairs with 0.032 safety wire.

(g) Lower the aircraft to the ground.

2 TAIL WHEEL

2.1 STANDARD WHEEL

(a) INSPECTION

1. Inspect the solid rubber tire for excessive wear and any flat areas.
2. Lubricate per Chapter 6.2

2.2 3200-TYPE WHEEL

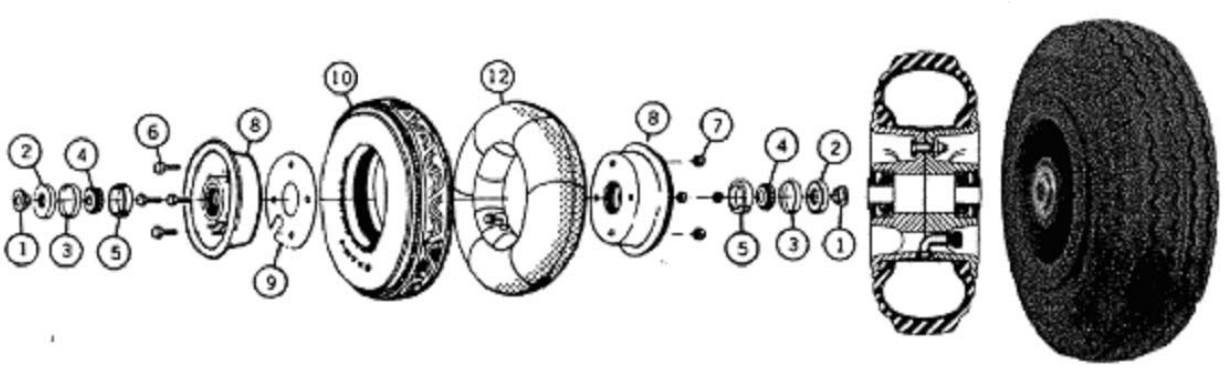

1 – Spacer	2 - Grease Retainer	3 - Inner Spacer	4 - Bearing
5 - Bearing Race	6 - Bolt	7 - Nut	8 - Hub
9 - Gasket	10 - Tire	11- Tube	

Figure 6.3.8.2: Tail Wheel Assembly

CAUTION
Care must be taken to avoid damaging wheel halves when breaking tire beads loose.

WARNING
DO NOT ATTEMPT TO REMOVE VALVE CORE UNTIL TIRE HAS BEEN COMPLETELY DEFLATED. IF IT IS UNSCREWED BEFORE THE AIR PRESSURE HAS BEEN RELEASED, THE VALVE CORE WILL BE EJECTED AT A HIGH VELOCITY.

WARNING
INJURY CAN RESULT WHEN ATTEMPTING TO SEPARATE WHEEL HALVES WITH THE TUBE INFLATED.

Refer to Figure 6.3.8.2

(1) DISASSEMBLY

(a) Deflate the tube (12).

(b) Break the tire bead loose from the wheel.

(c) Remove the wheel half nuts (5) and bolts (6).

(d) Pull the wheel hubs (8) apart being careful with the valve stem.

(e) Remove the spacer (1), grease retainer (2), inner spacer (3) and bearing (4) from each hub.

(2) INSPECTION

(a) Wipe the tire and the tube with a dry cloth. If the tire or the tube is spotted with grease, oil or other deposits, wash in a solution of soap and water. Rinse with clean water and dry with a clean cloth.

(b) Visually inspect the tire inside and out for cuts, uneven or excessive wear, and penetration by foreign objects. Replace if the tire is in poor condition.

(c) Visually inspect the inner tube for wear, cuts or cracks taking a close look at the valve stem base. Replace if the tube is in poor condition.

(d) The tire should be removed when the tread is worn to the base of a groove. Tires that are worn through the top fabric layer can only remain in service long enough to return to a maintenance base to be replaced.

(e) Clean all metal parts (including the bearings) in a cleaning solution. Dry all parts with compressed air.

(f) Inspect the bearing and races for wear or damage. Replace if necessary.

(6) REASSEMBLY

(a) Dust the inside of tire lightly with talcum powder.

(b) Place the tube (12) in the tire (10).

(c) Insert the wheel hubs (8) with the gasket (9) in between into the tire and tube assembly. Make certain the gasket (9) is properly aligned with tube valve and hub bolt holes.

(d) Insert 4 bolts and engage with 4 nuts. Torque to 80-100 in-lbs.

(e) Inflate the tire to 50 - 60 psi.

(f) Pack the bearings with grease (MIL-G-81322E).

(g) Insert a bearing (4), inner spacer (3), grease retainer (2) and spacer (1) into the each wheel hub.

(h) To install on the airplane, see Section 6.3.7.(8).

3 BRAKE CALIPERS

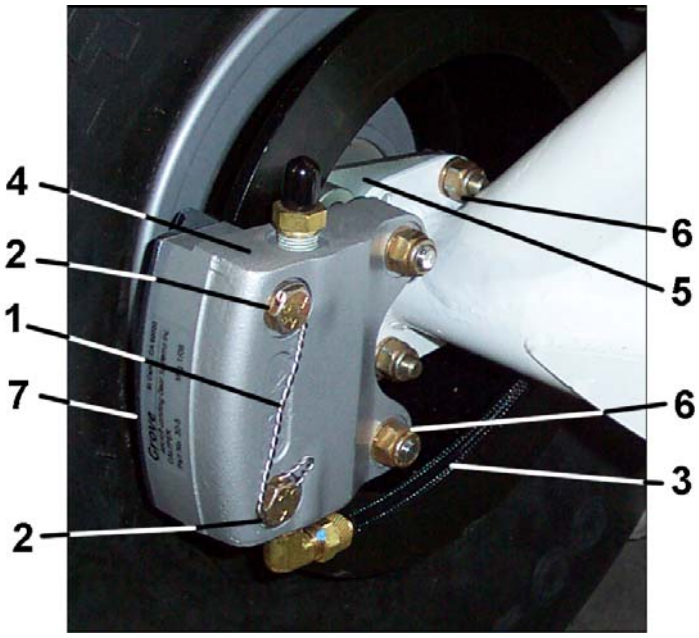

1 - Safety Wire	2 - Bolts	3 - Brake Line
4 - Caliper	5 - Backing Plate	6 - Anchor Lugs
7 - Brake Back Plates		

Figure 6.3.8.3: Brake Calipers

(1) REMOVAL

(a) Cut the safety wire (1) and remove the brake back plate bolts (2).

(b) Disconnect the brake line (3) from the caliper (4).

(c) Separate the caliper (4) from backing plate (5).

(2) INSPECTION

(a) Inspect the brake linings for loose rivets, cracks and uneven wear.

(b) The minimum lining thickness is 0.100 inches.

(c) Inspect the calipers for leaks and excessive corrosion.

(d) If leaks are present at the pistons, overhaul the caliper.

(e) Inspect the brake backing plate for cracks or excessive wear.

(f) Replace the parts if their condition so dictates.

(3) INSTALLATION

(a) Position the brake pressure plate on the caliper so the linings are facing the disc.

(b) Insert the caliper anchor lugs (6) into the backing plate (5) holes.

(c) Connect the brake line (3) and tighten. Make sure the wheel turns freely.

(d) Position the brake back plates (7), insert the bolts (2), and torque to 65-75 in/lbs.

(e) Safety (1) bolts (2) with 0.032 safety wire.

(f) Make sure the wheel turns freely.

4 MASTER CYLINDER AND PARKING BRAKE VALVE

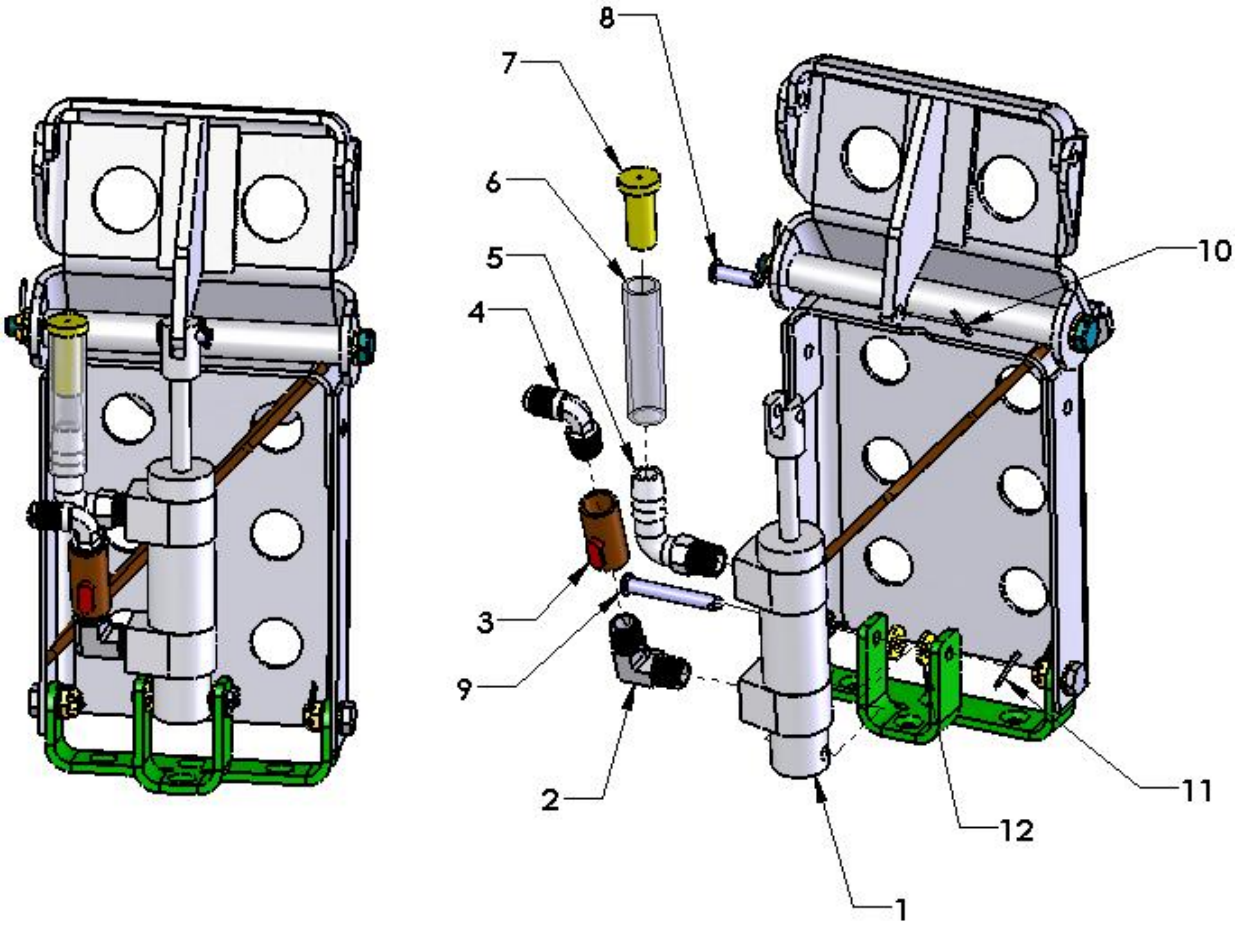

Figure 6.3.8.4: Brake Master Cylinder and Parking Brake Valve

1 – Master Cylinder	2 – 90° Male Elbow	3 – Ball Valve
4 – 90° Brass Poly-Flow Fitting	5 – Nylon 90° Tube Fitting	6 – Brake Reservoir
7 – Reservoir Plug	8 – MS20392-2C17 Clevis Pin	9 – MS20392-2C39 Clevis Pin
10 – AN380-2-2 Cotter Pin	11 – AN380-2-2 Cotter Pin	12 – AN960-10 Washer

(1) REMOVAL

(a) Drain hydraulic fluid from system.

(b) Disconnect brake line from 90° Brass Poly-Flow Fitting (4).

(c) Remove Cotter Pins (10) (11) from Clevis Pins (8) (9).

(d) Remove Clevis Pins (8) (9) and AN960-10 Washers (12).

(e) Remove Master Cylinder (1) and attached components.

(2) INSPECTION

(a) Inspect Master Cylinder (1) for signs of leaks, cracks, or any other damage.

(b) Inspect Brake Reservoir (6) for signs of leaks, cracks, or any other damage.

(c) Inspect all fittings (2) (3) (4) (5) for signs of leaks, cracks, or any other damage.

(3) INSTALLATION

See Figure 6.3.8.4

(a) Ensure center to center distance of bottom hole to upper hole on Master Cylinder (1) is 5.125". Adjust distance as required by twisting nut on Master Cylinder arm.

(b) Ensure Master Cylinder lock nut is tight.

(c) Locate Master Cylinder (1) on rudder pedal as shown in figure 6.3.8.4.

(d) Insert Clevis Pin (9) thru rudder pedal, AN960-10 Washers (12), and bottom of Master Cylinder (1).

(e) Insert Clevis Pin (8) thru rudder pedal and top of Master Cylinder (1) arm.

(f) Secure both clevis pins (8) (9) with Cotter Pins (10) (11).

(g) Connect brake line to 90° Brass Poly-Flow Fitting (4).

(h) Fill brake system with MIL-H-5606 hydraulic fluid. Bleed system carefully ensuring no air is left in the brake lines. Top off Brake Reservoir (6) making sure that it is a minimum of ¾ full.

5 MAINTENANCE

No repairs or alterations - as outlined in ASTM Section 8 or in this manual - are authorized at this time for the CC11.

If any repairs or alteration tasks should be required to be performed before the release of this section of the manual, it shall be accomplished using approved engineering data that will be provided by Cub Crafters' Engineering Department.

To obtain such data and approvals please contact:

Cub Crafters, Inc.
1918 South 16th Avenue
Yakima, WA. 98903
Tel: 509-248-9491
support@cubcrafters.com

INTENTIONALLY LEFT BLANK

6.3.9 ENGINE MOUNT

(1) INSPECTION

See inspection forms in Appendix 6.A to perform periodic inspection tasks.

(2) REPAIR

No major repair or alterations, as outlined in ASTM F2483, FAR 43, or in this manual are authorized at this time.

To obtain engineering approvals for any major repairs or alterations, please contact Cub Crafters at:

Cub Crafters, Inc.
1918 South 16th Avenue
Yakima, WA. 98903
Tel: 509-248-9491
support@cubcrafters.com

INTENTIONALLY LEFT BLANK

6.3.10 ENGINE

TABLE OF CONTENTS

1 TROUBLESHOOTING, SERVICING, AND MAINTENANCE 2
2 SERVICING – OIL SYSTEM 5
2.1. CHANGING ENGINE OIL 5
2.2. OIL SCREEN 6
(1) REMOVAL 6
(2) INSPECTION 6
(3) INSTALLATION 7
2.3. OIL COOLER 7
(1) REMOVAL 8
(2) INSTALLATION 8
3 ENGINE MAINTENANCE 8

1 TROUBLESHOOTING, SERVICING, AND MAINTENANCE

This section is prepared to help the owners / operators diagnose the probable causes and determine appropriate corrective actions. For additional information on more specific trouble shooting procedures, refer to the engine Operator's Manual and their Maintenance and Overhaul Manual.

WARNING
DO NOT ATTEMPT TO USE THIS MANUAL AS A GUIDE FOR PERFORMING REPAIR OR OVERHAUL OF THE ENGINE. THE ENGINE OVERHAUL MANUAL MUST BE CONSULTED FOR SUCH OPERATIONS.

PROBLEM	PROBABLE CAUSE	REMEDY	Reference in this manual
Engine does not start	Insufficient fuel.	Fill tanks	6.2.3
	Fuel does not reach carburetor.	Clean tank vents, blowout supply line, replace shut-off valve, repair pump, clean filter.	6.3.15, 7*NOTE
	Carburetor float valve stuck shut.	Remove carburetor and repair.	7*NOTE
	Carburetor screen or jets plugged.	Remove and clean.	6.3.15
	Insufficient priming (weak explosions).	Repeat starting procedure with more priming.	
	Excess priming (puffs of black smoke).	Clear cylinders by turning propeller several revolutions, with ignition switch "OFF", throttle wide open.	
	Engine hot (vapor lock in fuel system).	Disconnect fuel line at carburetor and purge system.	6.3.15
	Low battery charge	Recharge battery.	6.3.17
	Cold oil.	Turn propeller by hand several revolutions to break loose congealed oil.	
	Incorrect starter adjustment.	Readjust shift lever screw.	7*NOTE
	Spark plugs fouled.	Remove and clean. Check gaps.	6.3.18
	Spark plug cables defective.	Replace defective parts.	7*NOTE
Irregular idling	Incorrect idle mixture adjustment.	Correct carburetor adjustment.	6.3.15
	Carburetor idle air bleed plugged.	Disassemble, as required, and clean.	7*NOTE
	Spark plugs fouled.	Remove and clean.	6.3.18
Irregular idling	Leak in air induction system.	Tighten loose joints. Replace damaged parts.	7*NOTE
Rough running	Propeller out of balance.	Remove and inspect.	6.3.16

PROBLEM	PROBABLE CAUSE	REMEDY	Reference in this manual
Rough running - continued…	Engine mount bolts loose.	Tighten.	5.2.5
	Defective spark plug cables.	Test for break-down at high voltage.	
	Worn cam lobe.	Overhaul engine.	8*NOTE
	Defective valve lifter.	Remove and test hydraulic unit. Replace if worn.	7*NOTE
	Scored valve stems.	Replace valves and guides.	7*NOTE
	Warped valves.	Replace. Grind seats.	7*NOTE
	Detonation.	Use specified fuel. Keep cylinder head temperature below specified maximum.	
Poor acceleration	Engine not warm enough.	Continue warm-up.	
	Defective throttle control.	Check for binding, kinks, slipping, worn parts.	
	Plugged air filter.	Remove and clean filter.	6.3.12
	Idling mixture too lean.	Readjust.	6.3.15
	Idling jet plugged.	Clean carburetor.	6.3.15
	Water in fuel.	Drain sediment trap.	6.3.15
	Leak in air induction system.	Check all joints and throttle shaft bearings.	6.3.12
Low power	Defective ignition cable.	Test for high voltage leaks. Replace parts.	
	Scored valve stems.	Replace valves and guides.	7*NOTE
	Warped valves.	Replace valves. Grind seats.	7*NOTE
	Throttle not fully open.	Readjust linkage.	6.3.12
	Carburetor air heat valve not closing fully.	Remove filter, inspect valve. Straighten plate.	7*NOTE
	Propeller blades warped.	Inspect pitch. Replace.	
	Ice forming on carburetor throttle valve.	Apply full carburetor air heat.	
	Air filter plugged.	Remove and clean.	6.3.12
	Fuel flow restricted.	Inspect tank vents. Inspect shutoff valve. Clean strainer. Clean carburetor screen. Blow out fuel supply line.	6.3.15
	Worn cylinders, pistons and/or piston rings.	Overhaul engine.	8*NOTE
Low oil pressure	Low oil supply.	Replenish.	
	Low oil viscosity.	Drain sump. Refill with correct grade.	6.2.3
	Plugged oil screen.	Remove and clean.	6.3.10

PROBLEM	PROBABLE CAUSE	REMEDY	Reference in this manual
Low oil pressure - continued…	Dirt on oil pressure relief valve seat.	Clean plunger and seat. Replace dirty oil.	6.2.3
	Oil pressure relief valve seat worn.	Overhaul engine. Refinish valve seat.	8*NOTE
	Oil pressure relief valve plunger sticking.	Remove cap and plunger. Clean parts.	7*NOTE
	Oil pump suction tube screen plugged.	Remove sump. Clean screen.	7*NOTE
	Engine bearings worn.	Overhaul engine.	8*NOTE
	Oil pressure gauge defective.	Test gauge, and replace or repair.	7*NOTE
	Internal oil leak.	Overhaul engine.	8*NOTE
	Cracked crankcase cover casting, defective oil pump, leaking suction tube.	Overhaul engine. Replace damaged parts.	8*NOTE
High oil temperature	Low oil supply.	Replenish.	
	Dirty or diluted oil.	Drain sump, and fill with fresh oil of proper grade.	6.2.3
	Prolonged ground operation at high speed.	Avoid prolonged running on the ground.	
	Excessive rate of climb.	Avoid low air speed.	
	Lean fuel-air mixture.	Refer to overhaul manual.	7*NOTE

NOTE:
*NOTE – Refer to Chapter 7, Chapter 8 or CC340 Engine Manual for more details.

2 SERVICING – OIL SYSTEM

The oil system is an integral part of the engine, except for the cooler that is mounted on the left side of the firewall.

2.1. CHANGING ENGINE OIL

(a) Warm engine

(b) Remove the upper and lower engine cowlings. (Refer to Chapter 6.3.15)

(c) Place a suitable drain pan under the oil drain.

(d) Open the oil drain. Allow the oil to completely drain out.

(e) Clean oil screen and replace oil filter (if installed)

(f) Close the oil drain making sure it is sealed.

(g) Fill the engine with an approved oil.

(h) Verify oil quantity with the dipstick.

(i) Secure dipstick.

(j) Install engine cowling. (Refer to Chapter 6.3.15)

(k) Start the engine in accordance with Pilot's Operating Handbook procedures and monitor the engine oil pressure gauge for proper oil pressure. Allow the engine to idle for a few minutes and shutdown the engine in accordance with POH procedures.

(l) Visually check inside of cowling for any obvious leaks and correct them as necessary.

CAUTION
If the oil pressure does not rise in 30 seconds, stop the engine and determine the trouble.

2.2. OIL SCREEN

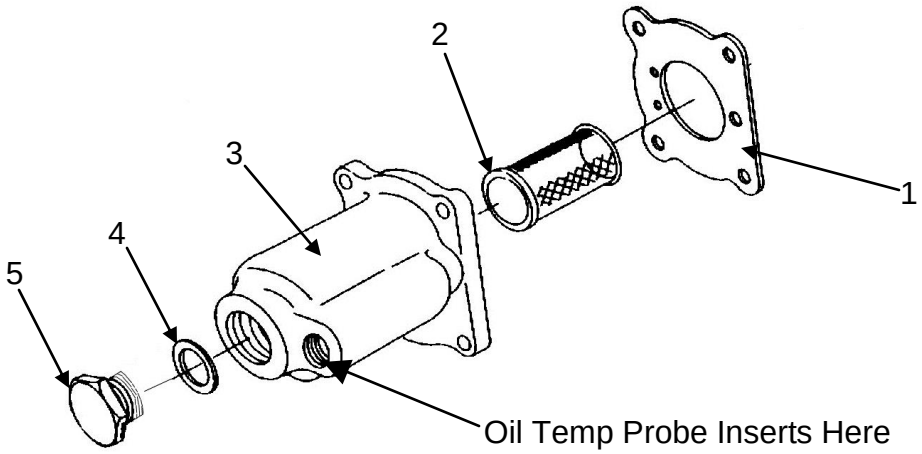

1 - Gasket
2 - Pressure Screen
3 – Screen Housing
4 - Gasket
5 - Plug
* Oil Temp Probe (Not Shown)

Figure 6.3.11.1: Oil Screen

(1) REMOVAL

(a) Drain the oil.

(b) Place a rag below the screen to catch the oil.

(c) Remove the bolts (7) that secure the oil pressure screen housing.

(d) Drain the oil from the housing and remove the screen (2).

(2) INSPECTION

(a) Inspect the screen (2) and inside the housing (3) for foreign particles.

CAUTION
If examination of the screen indicates abnormal metal content, additional service may be required to determine the source and possible need for corrective maintenance

(b) Remove the old gasket (1) and make sure the housing and case surfaces are clean.

(3) INSTALLATION

(c) Assemble the screen (2) in the housing (3), assemble the gasket (1) and the housing (3) on mounting pad.

(d) Ensure that the gasket is properly oriented.

(e) Using new lock washers (8), secure the housing with 4 bolts (7), torque to 92-100 in/lbs.

(f) Remove the rag and clean all excess oil.

2.3. OIL COOLER

Figure 6.3.11.2: Oil Cooler

(1) REMOVAL

(a) Disconnect the hose fittings from the elbows that go into the oil cooler. Use a backup wrench on the elbow fittings to prevent damage to the oil cooler.

(b) Loosen the hose clamp and remove the air duct.

(c) Remove the through-bolt that hold the brace and carefully remove the oil cooler.

(d) Disconnect the hoses from the oil cooler elbows.

(e) Remove the elbows from the oil cooler.

(2) INSTALLATION

(a) Apply thread sealant (EZ TURN Lubricant) to all but the most inner pipe thread on each elbow but not on the flare fitting threads. Screw the elbows into the oil cooler. Be very careful to start the threads properly and tighten with the elbow pointing the proper direction.

(b) Position the oil cooler and install the fasteners.

(c) Torque the bolts/nuts.

(d) Attach the oil hose to the elbow on the oil cooler and tighten the fitting while holding the elbow with a wrench.

3 ENGINE MAINTENANCE

No major repair or alterations, as outlined in ASTM F2483, FAR 43, or in this manual are authorized at this time.

To obtain engineering approvals for any major repairs or alterations, please contact Cub Crafters at:

Cub Crafters, Inc.
1918 South 16th Avenue
Yakima, WA. 98903
Tel: 509-248-9491
support@cubcrafters.com

6.3.11 ENGINE CONTROLS

TABLE OF CONTENTS

1. GENERAL 2
2. MAINTENANCE 2
2.1 PIN VICE GRIP THROTTLE CABLE 2
(1) LEVER ATTACHMENT 3
(3) ATTACHMENT OF THROTTLE CABLE TO SIDE PANEL 4
(4) MOTOR MOUNT THROTTLE CABLE ATTACHMENT 5
(5) THROTTLE CABLE TO CARBURETOR ARM ATTACHMENT 7
(6) INSPECTION 8
2.2 HEAVY DUTY THROTTLE CABLE 9
(1) LEVER ATTACHMENT 9
(2) LEVER INTERCONNECT LINKAGE 10
(3) ATTACHMENT OF THROTTLE CABLE TO SIDE PANEL 11
(4) MOTOR MOUNT THROTTLE CABLE ATTACHMENT 12
(5) THROTTLE CABLE TO CARBURETOR ARM ATTACHMENT 14
(6) INSPECTION 14
2.3 MIXTURE 15
(1) MIXTURE CONTROL CABLE TO PANEL ATTACHMENT 15
(3) MOTOR MOUNT MIXTURE CABLE ATTACHMENT 16
(2) MIXTURE CABLE TO CARBURETOR LEVER SWIVEL ATTACHMENT 17
(3) INSPECTION 18

1. GENERAL

Each crewmember is provided with a throttle lever on the left side of the cockpit. The air-to-fuel mixture is adjusted manually with a red control knob located on the left side of the instrument panel. Pulling the mixture control all the way back operates a cut-off valve on the carburetor that stops the supply of fuel to the engine.

2. MAINTENANCE

2.1 PIN VICE GRIP THROTTLE CABLE

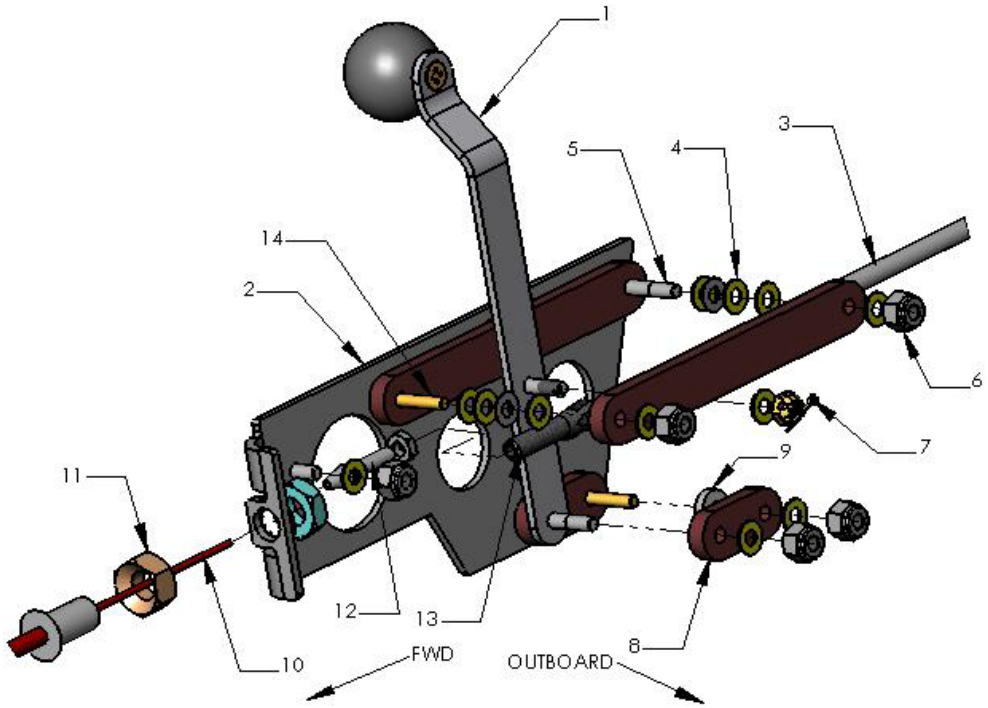

1 – Throttle Lever	2 – Throttle Lever Plate	3 – Throttle Linkage Rod
4 – Washers	5 – AN525 Screws	6 – Nylon Lock Nut
7 – Cotter Pin	8 – Phenolic Spacer	9 – Bushing
10 – Throttle Cable	11 – Cable Nut	12 – Pin Vice Wire Grip
13 – MS35812-1 (Clevis)	14 – MS24693 (Counter Sunk Screw)	

Figure 6.3.11.1 Pin Vice Throttle Installation (Forward Throttle Shown)

(1) LEVER ATTACHMENT

Refer to Figure 6.3.11.1

(a) Each lever is installed onto a bolt that is mounted to the throttle lever plate (2) as shown.

(b) Each control has spacers (8) which are secured with a AN525 screw (5), washers (4), a bushing (9), and nylon lock nuts (6).

(c) The connecting rod (3) is secured to the throttle levers with a AN525 screw (5), washers (4), castle nut, and cotter pin (7).

(d) The throttle cable end is secured to the front throttle lever with a pin vice wire grip (12), MS35812-1 clevis (13), AN525 screw (5) washers (4), castle nut, and cotter pin (7).

(2) LEVER INTERCONNECT LINKAGE

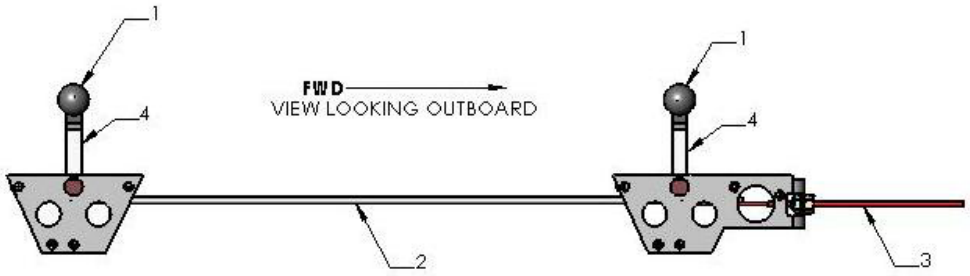

1 – Throttle Knob	2 – Connecting Rod
3 – Throttle Cable	4 – Throttle Lever

Figure 6.3.11.2 Throttle Interconnect Linkage
(View from the cockpit, looking outboard)

(3) ATTACHMENT OF THROTTLE CABLE TO SIDE PANEL

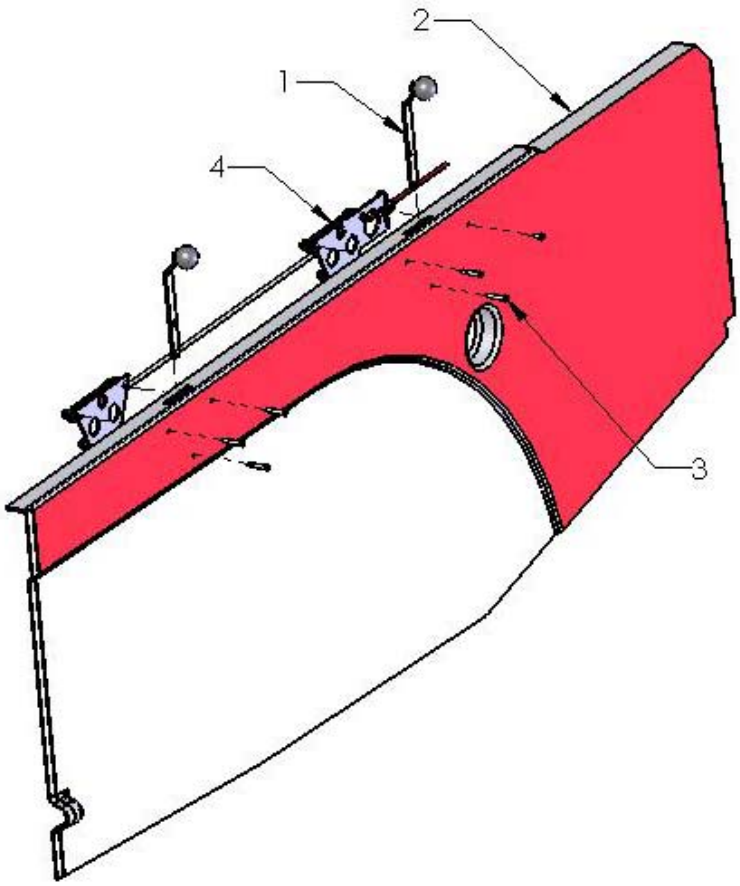

1 – Throttle Lever	2 – Side Panel	3 – AN525 Screw
4 – Throttle Plate		

Figure 6.3.11.3 Attachment of Throttle to Side Panel

Refer to Figure 6.3.11.3

The throttle plates (4) are kept from moving by six AN525 screws (3) that are bolted thru the left hand composite side panel (2).

(4) MOTOR MOUNT THROTTLE CABLE ATTACHMENT

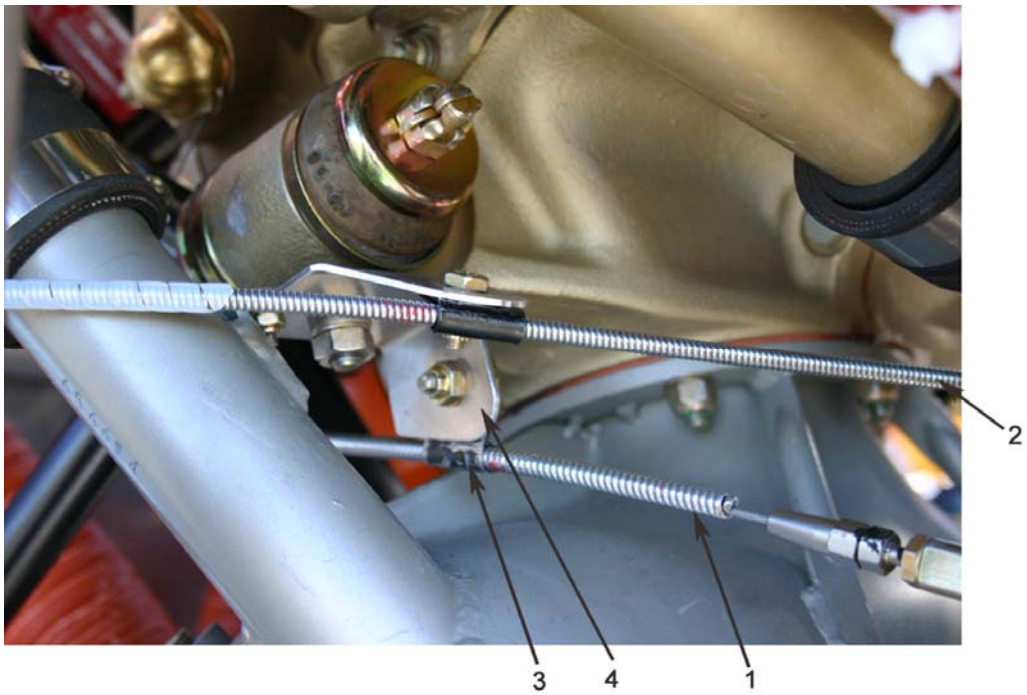

1 – Throttle Cable	2 – Mixture Cable
3 – Cable Clamp	4 – Mixture Bracket

Figure 6.3.11.4 Attachment of Throttle Bracket to Engine Mount

Refer to Figure 6.3.11.4

The throttle cable (1) is held in place to the mixture bracket (4) and secured with a cable clamp (3), bolt, washer and nut.

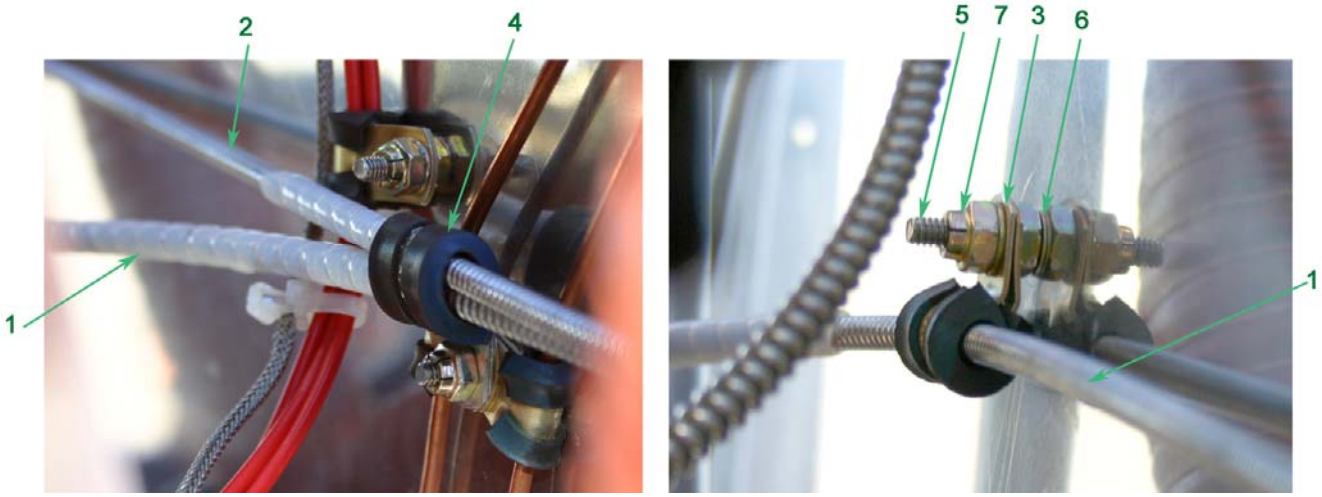

1 – Throttle Cable	2 – Mixture Cable	3 – Clamp
4 – Clamp	5 – Bolt	6 – Washer
7 – Nut		

Figure 6.3.11.5 Attachment of Throttle Cable to Firewall

Refer to Figure 6.3.11.5

The throttle cable is held in place to the firewall with clamps secured with bolts, washers, and nuts.

(5) THROTTLE CABLE TO CARBURETOR ARM ATTACHMENT

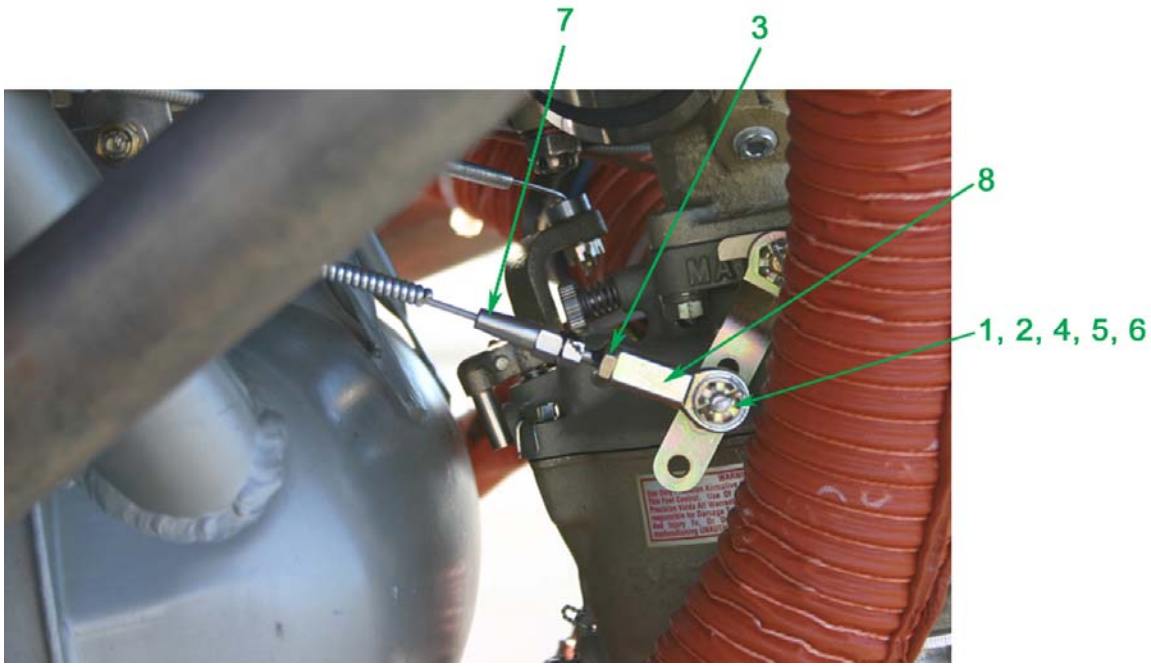

1 – AN3 Bolt	2 – Castle Nut	3 – Nut
4 – Bushings	5 – Cotter Pin	6 – Washer
7 – Pin Vice Grip	8 – Bearing Rod End	

Figure 6.3.11.6 Attachment of Throttle Cable to Carburetor Arm

Refer to Figure 6.3.11.6

(e) The throttle cable is secured to the carburetor arm with a bolt (1), through-bushings (4), a washer (6), a nut (2), and a cotter pin (5).

(f) The throttle travel can be adjusted by screwing the bearing rod end. Be sure that the bearing rod end jam nut is retightened after making any adjustment.

(6) INSPECTION

(g) Ensure that the throttle arm at the carburetor contacts both stops at either extreme of its travel while the throttle levers in the cabin have positive clearance from the panel.

(h) Move the throttle to either full open or full closed, inspect cable attachment at the carburetor. Repeat the same procedure with the full opposite throttle setting.

(i) Control operation should be smooth. Lubricate the cable with LPS #2 if needed.

(j) The throttle levers and cable should have enough friction so that the levers do not creep at full power while at the same time operating easily.

2.2 HEAVY DUTY THROTTLE CABLE

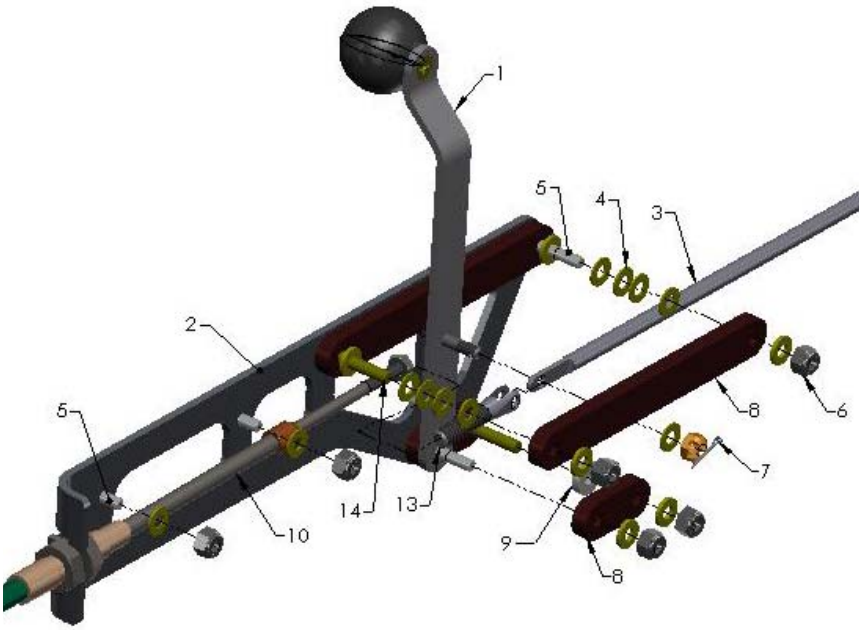

1 – Throttle Lever	2 – Throttle Lever Plate	3 – Throttle Linkage Rod
4 – Washers	5 – AN525 Screws	6 – Nylon Lock Nut
7 – Cotter Pin	8 – Phenolic Spacer	9 – Bushing
10 – Throttle Cable	11 – Cable Nut	13 – MS35812-1 (Clevis)
14 – MS24693 (Counter Sunk Screw)		

Figure 6.3.11.7 Throttle Installation (Forward Throttle Shown)

(1) LEVER ATTACHMENT

Refer to Figure 6.3.11.7

(a) Each lever is installed onto a bolt that is mounted to the throttle lever plate (2) as shown.

(b) Each control has spacers (8) which are secured with a AN525 screw (5), washers (4), a bushing (9), and nylon lock nuts (6).

(c) The connecting rod (3) is secured to the throttle levers with a AN525 screw (5), washers (4), castle nut, and cotter pin (7).

(d) The heavy duty throttle cable is secured to the clevis with an AN315 nut.

(2) LEVER INTERCONNECT LINKAGE

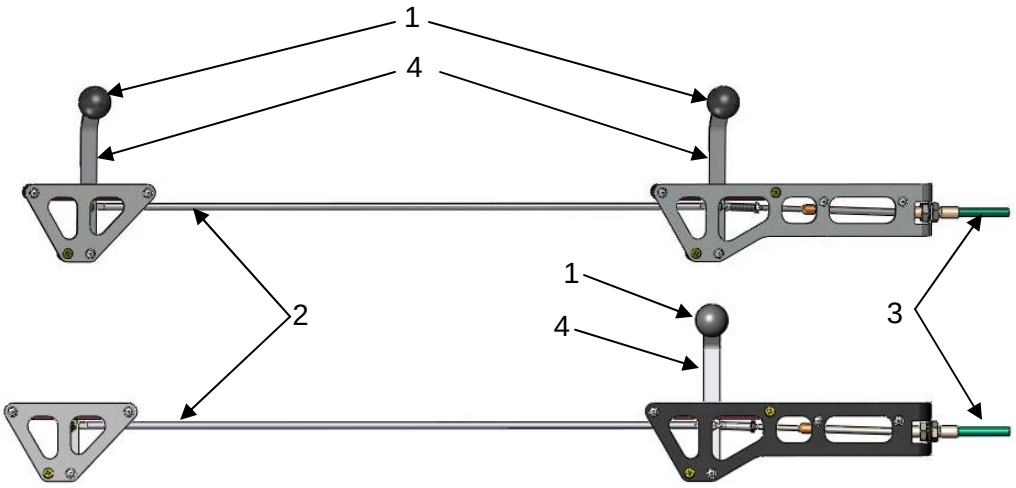

1 – Throttle Knob	2 – Connecting Rod
3 – Throttle Cable	4 – Throttle Lever

Figure 6.3.11.8 Throttle Interconnect Linkage
(View from the cockpit, looking outboard)
Top View - Dual Throttle Controls
Bottom View - Single Throttle Control

(3) ATTACHMENT OF THROTTLE CABLE TO SIDE PANEL

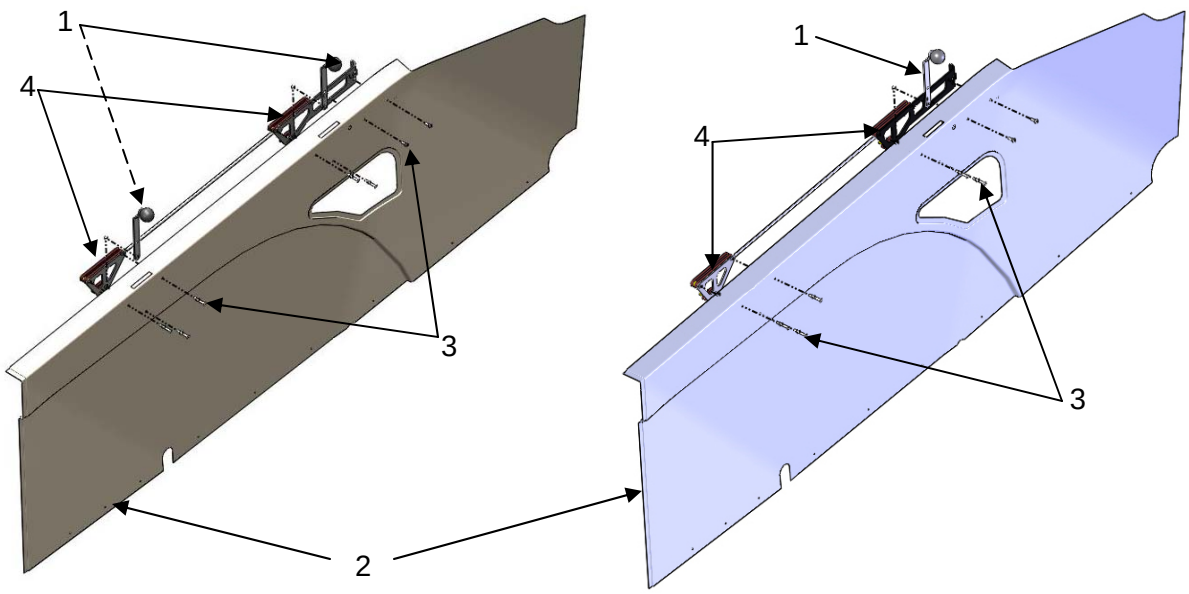

1 – Throttle Lever	2 – Side Panel	3 – AN525 Screw
4 – Throttle Plate		

Figure 6.3.11.9 Attachment of Throttle to Side Panel
Dual and Single Throttle Attachments Shown

Refer to Figure 6.3.11.9

The throttle plates (4) are kept from moving by seven AN525 screws (3) that are bolted through the left hand composite side panel (2).

(4) MOTOR MOUNT THROTTLE CABLE ATTACHMENT

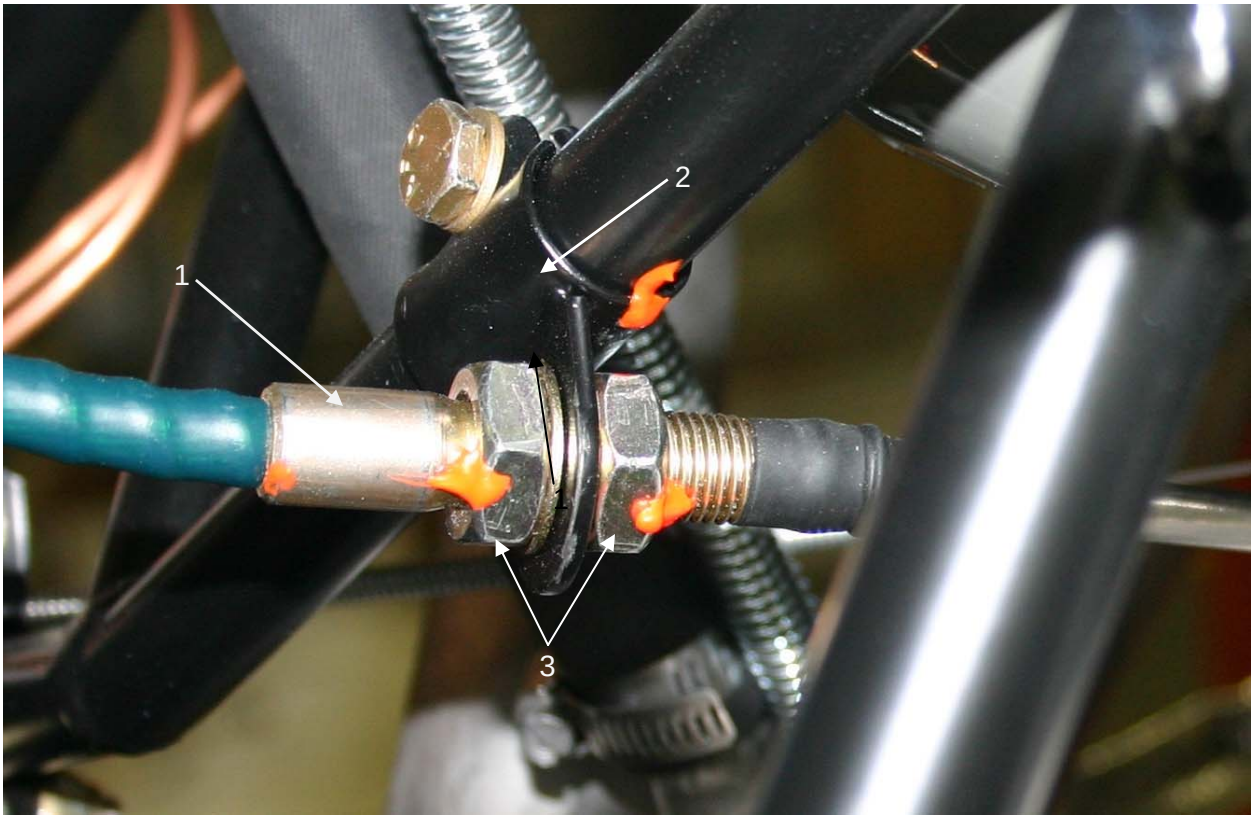

1 – Throttle Cable	2 – Engine Mount Bracket
3 – Jam Nut	

Figure 6.3.11.10 Attachment of Throttle to Engine Mount Tube Bracket

Refer to Figure 6.3.11.10

The throttle cable (1) is held in place to the Engine Mount bracket (2) with two jam nuts. The Engine Mount Bracket (2) is held in place on the engine mount tube with a bolt, two washers and nut.

1 - Firewall	2 - Throttle Cable

Figure 6.3.11.11 Routing of Throttle Cable through Firewall

Refer to Figure 6.3.11.11

The heavy duty throttle cable is directly routed through a hole in the firewall to the engine mount tube bracket. A bracket secures the throttle cable to the engine mount on the left hand side of the engine.

(5) THROTTLE CABLE TO CARBURETOR ARM ATTACHMENT

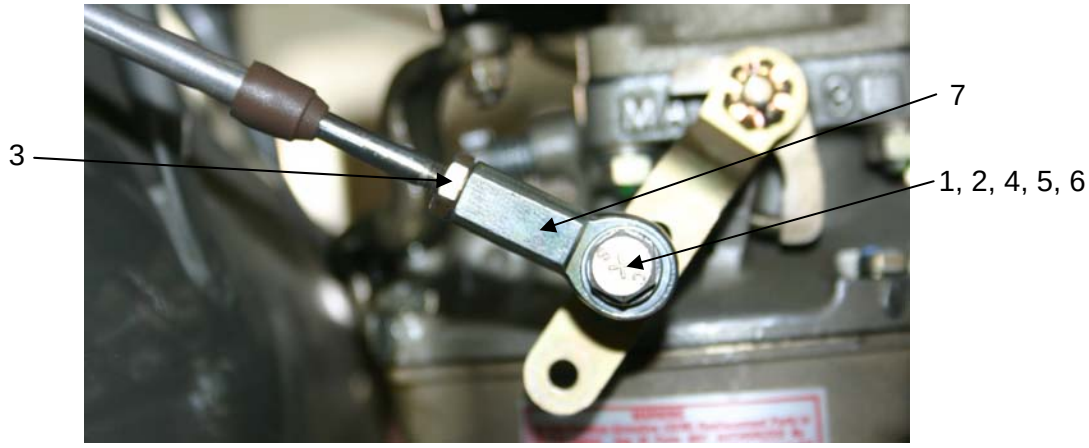

1 – AN3 Bolt	2 – Castle Nut	3 – Nut
4 – Bushings	5 – Cotter Pin	6 – Washer
7 – Bearing Rod End		

Figure 6.3.11.12 Attachment of Throttle Cable to Carburetor Arm

Refer to Figure 6.3.11.12

(a) The throttle cable is secured to the carburetor arm with a bolt (1), through-bushings (4), a washer (6), a castle nut (2), and a cotter pin (5).

(b) The throttle travel can be adjusted by screwing the bearing rod end. Be sure that the bearing rod end jam nut is retightened after making any adjustment.

(6) INSPECTION

(a) Ensure that the throttle arm at the carburetor contacts both stops at either extreme of its travel while the throttle levers in the cabin have positive clearance from the panel.

(b) Move the throttle to either full open or full closed, inspect cable attachment at the carburetor. Repeat the same procedure with the full opposite throttle setting.

(c) Control operation should be smooth. Lubricate the cable with LPS #2 if needed.

(d) The throttle lever(s) and cable should have enough friction so that the lever(s) does/do not creep at full power while at the same time operating easily.

2.3 MIXTURE

(1) MIXTURE CONTROL CABLE TO PANEL ATTACHMENT

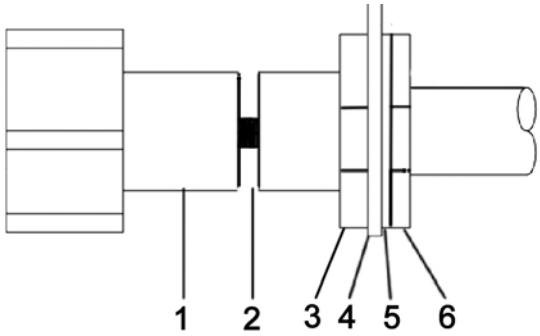

1 - Mixture Control Knob	2 - Cushion Space	3 - Panel Nut
4 – Instrument Panel	5 - Lock Washer	6 - Large Nut

Figure 6.3.11.13 - Mounting of the Mixture Control at the Instrument Panel

Refer to Figure 6.3.11.13

(a) The mixture control knob (1) is secured to the instrument panel (4) with a lock washer (5), and a nut (6).

(b) The mixture knob (1) should have enough movement so that the carburetor mixture lever contacts the stops at both extents of its travel and there should not be more than ¼" cushion (2) between the knob (1) and the panel nut (3) in the full rich position.

(3) MOTOR MOUNT MIXTURE CABLE ATTACHMENT

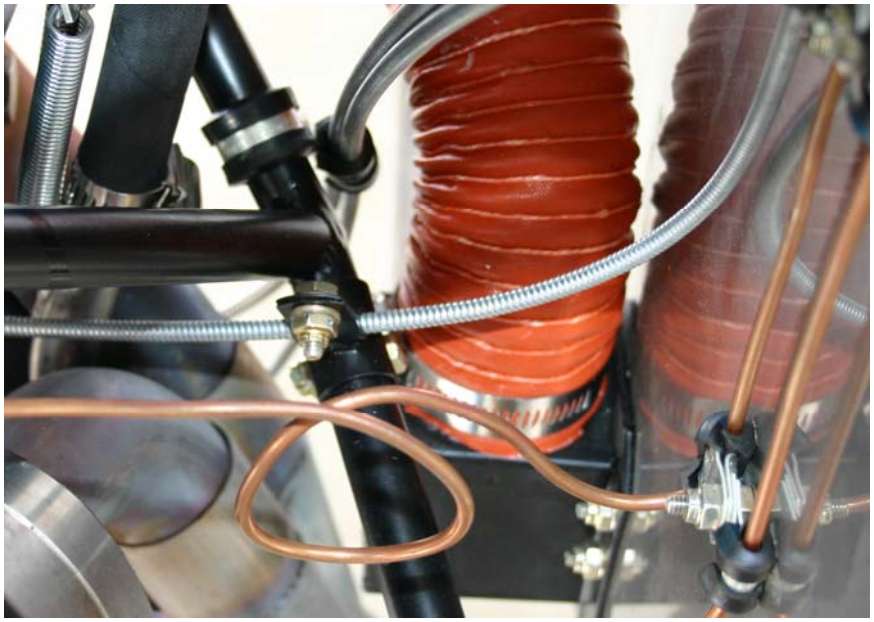

Figure 6.3.11.14 - Mounting of the Mixture Cable to Engine Mount

Refer to Figure 6.3.11.14

(a) The mixture cable is fastened to the mixture bracket clamp with a bolt, washers, and a nut.

(b) The mixture bracket is secured to the engine mount with a bolt, a washer, and a nut.

The position of the cable housing in the mixture bracket clamp affects the travel of the knob in relation to the instrument panel. The travel can be adjusted by loosening the mixture bracket clamp holding the cable housing and sliding the cable housing in the clamp. Retighten the clamp and check travel.

(c) Be sure the cable housing is held tightly in the clamp after making any adjustments.

(2) MIXTURE CABLE TO CARBURETOR LEVER SWIVEL ATTACHMENT

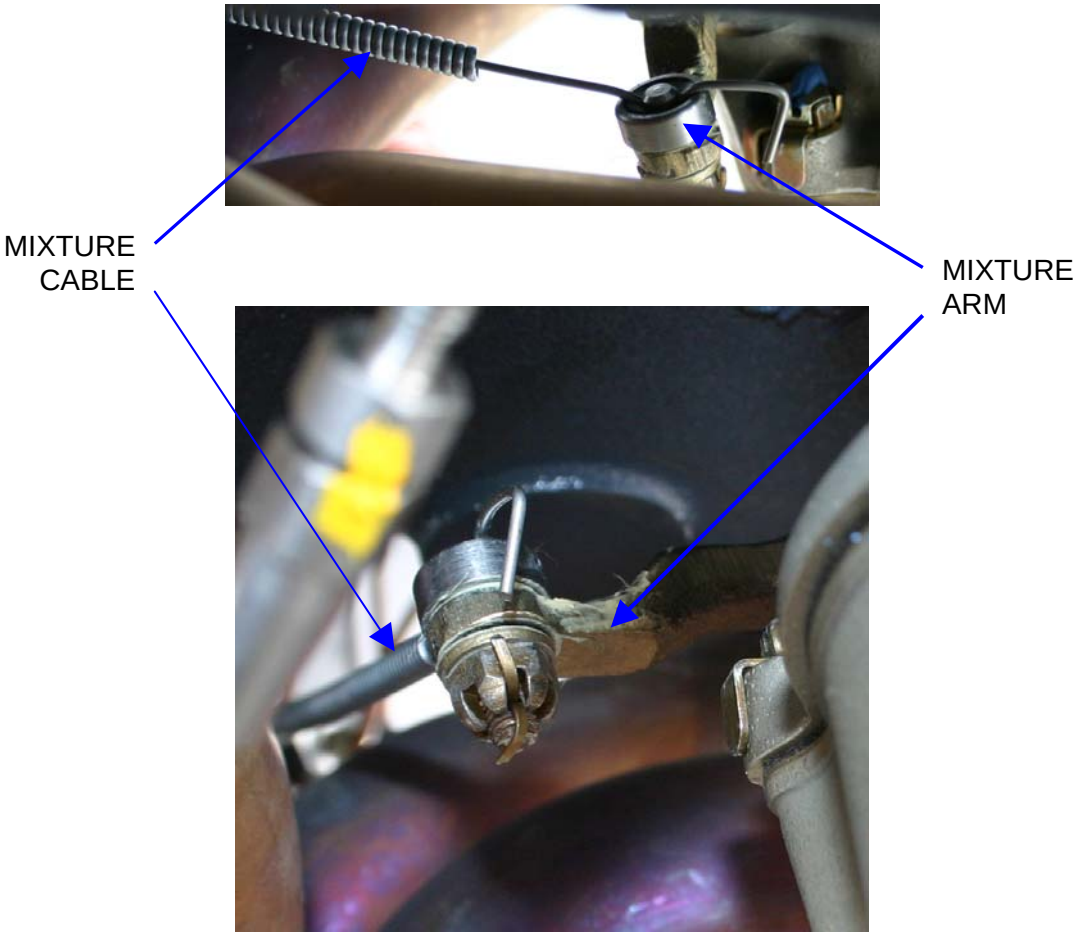

1- Mixture Cable	2- Stud	3- Swivel
4- Mixture Arm	5- Washer	6- Short Castellated Nut
7- Cotter Pin		

Figure 6.3.11.15 - Attachment of Mixture Cable to Carburetor Swivel Arm

Refer to Figure 6.3.11.15

(a) The control cable rod pivots the mixture control lever on the carburetor. The rod is held tight by the mixture swivel fitting.

(b) Adjusting the cable rod length at the swivel fitting affects the travel of the mixture control lever. There should be enough travel in the lever that it reaches the stops on either extreme of its travel.

(c) The swivel nut should be tightened enough to hold the cable rod firmly but not enough to shear it or strip the threads.

(3) INSPECTION

(a) Ensure that the mixture lever at the carburetor contacts both stops at either extreme of its travel. At the same time, there should be no more than ¼" cushion between the knob and the panel nut in the full rich position.

(b) Inspect to be sure the cable attach swivel does not have excessive play and the cable is held tightly by the clamp.

(c) Control operation should be smooth. Lubricate with LPS #2 if required.

6.3.12 INDUCTION SYSTEM

TABLE OF CONTENTS

1 GENERAL....2
1.1. AIR FILTER....2
(1) REMOVAL....3
(1) INSPECTION....3
(2) INSTALLATION....3
1.2. CARBURETOR HEAT....4
(1) INSTALLATION OF CABLE TO VALVE ARM SWIVEL FITTING....4

1 GENERAL

The induction air for the engine enters through a filter on the lower side of the cowling. Alternatively, the pilot may use the carburetor heat control, which operates a butterfly valve that allows heated, unfiltered air to feed into the carburetor. The carburetor heat control is located on the instrument panel.

CAUTION
Ground operations with the carburetor heat control in the hot position must be limited because it allows air to bypass the filter.

Should the air filter become obstructed, the carburetor air control provides an alternate manual means of supplying the engine with air for the induction system.

1.1. AIR FILTER

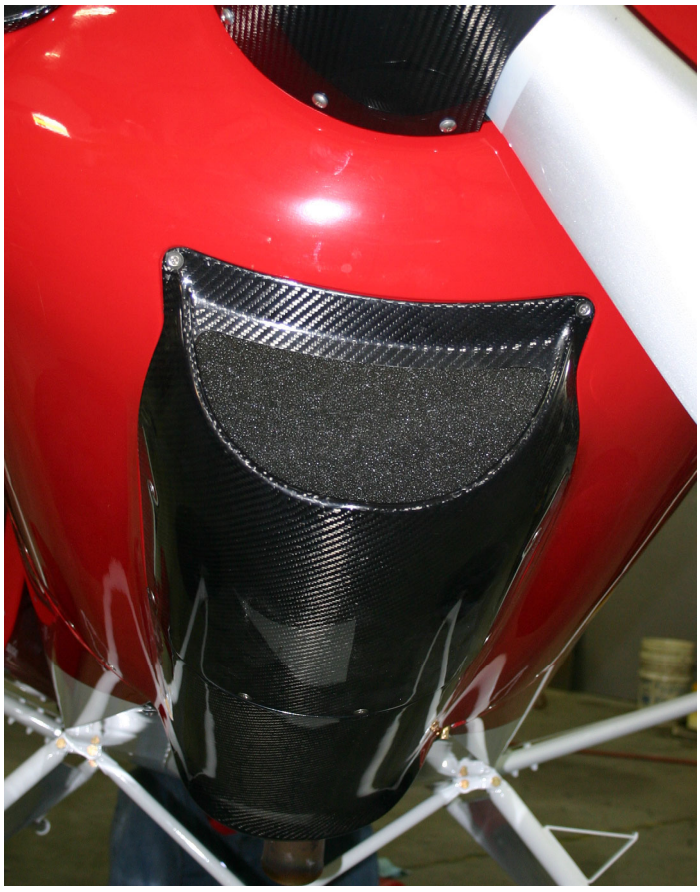

Figure 6.3.12.1: Air Filter

(1) REMOVAL

(a) Remove screws holding the lower access panel to the lower cowl.

(b) Remove lower access panel with air filter.

(c) If a new filter is required, contact Cub Crafters and seek replacement filter part number PC54108-001.

(1) INSPECTION

(a) Inspect the foam filter for any damage, such as tears or large holes.

(b) Clean the filter in a mild degreasing cleanser to remove dirt and other particles. Wring the excess from the element and allow it to dry.

(c) Apply filter oil (such as Castrol Foam Filter Oil, Amsoil High Tack Foam Filter Oil, No-Toil, or Bel-Ray Foam Filter Oil) to the element and work it into the cells throughout.

(2) INSTALLATION

(a) Align air filter with opening in lower access panel.

(b) Carefully position lower access panel on to lower cowl. Make sure air filter is inside lower access panel.

(c) Secure lower access panel to lower cowl with screws.

1.2. CARBURETOR HEAT

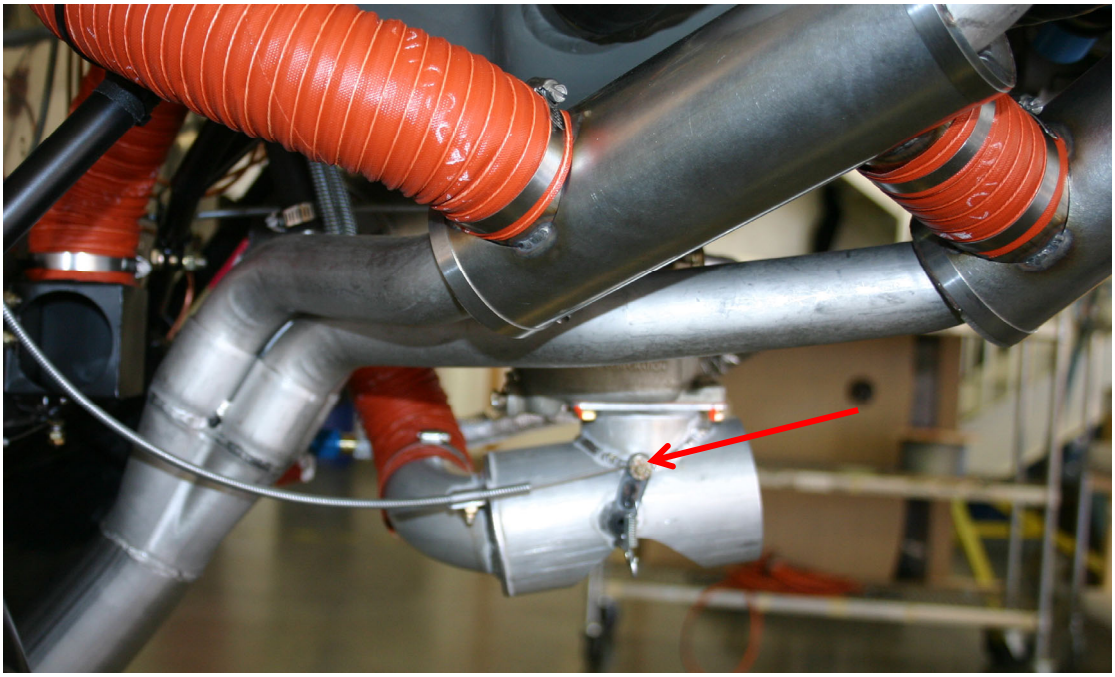

Figure 6.3.12.2: Carburetor Heat Valve

(1) INSTALLATION OF CABLE TO VALVE ARM SWIVEL FITTING

(a) Insert the carburetor heat control cable end through the swivel fitting stud.

(b) Insert the threaded end of the stud through the swivel fitting and through the carburetor heat valve arm.

(c) Place the AN960-10 washer and AN310-3 castle nut on the stud and tighten it one half turn past finger tight.

(d) Test the travel of the carburetor heat control knob in the cockpit and adjust the position of the cable within the fitting. When you are satisfied the position is correct, tighten the castle nut and install an AN380-2-2 cotter pin.

6.3.13 EXHAUST SYSTEM

TABLE OF CONTENTS

1 GENERAL....2
1.1. ENGINE EXHAUST....3
(1) REMOVAL....3
(2) INSPECTION....3
(3) INSTALLATION....3

1 GENERAL

The exhaust system is a four-into-one system. Shrouds mounted on the exhaust lines provide provision for both carburetor heat and cabin heat.

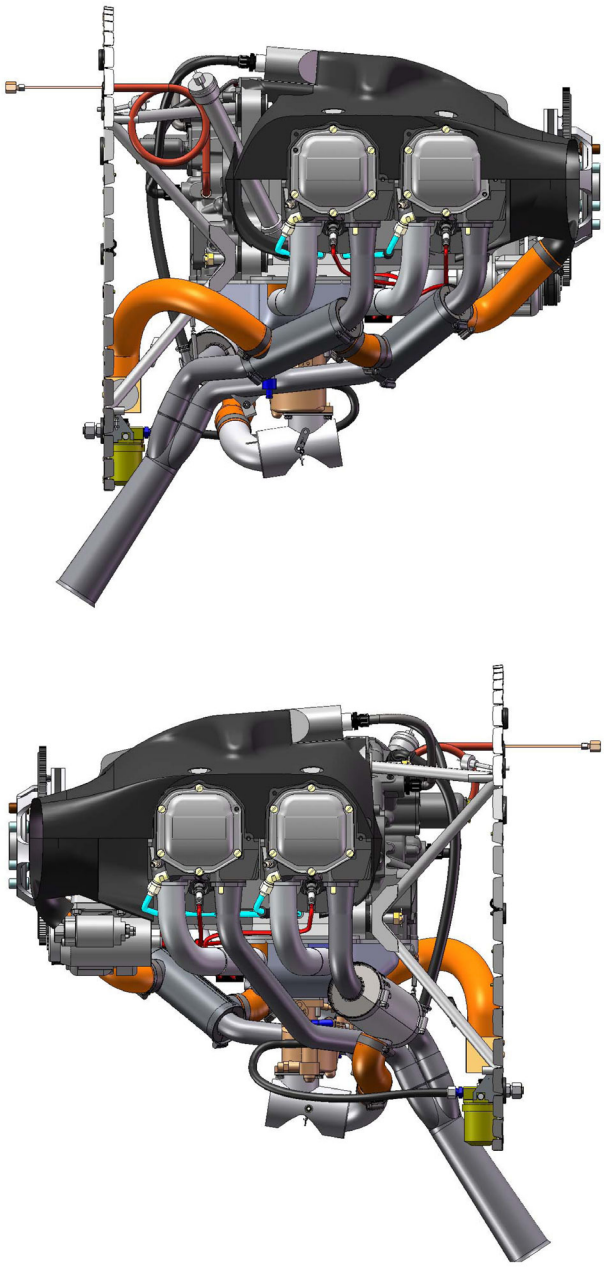

Figure 6.3.13.1: Exhaust System

1.1. ENGINE EXHAUST

(1) REMOVAL

(a) Remove the cowl as described in Section 6.3.14.

(b) Disconnect all of the SCAT ducts from the heat shrouds by loosening the hose clamps.

(c) Remove the forward induction elbow on each side of the engine. This is done by loosening the winged hose clamps and sliding the rubber couple inboard along the induction tube. Remove the nuts and washers holding the elbows to the engine. Set the elbows aside.

(d) Remove the nuts attaching the exhaust flanges to the engine cylinders and lower the exhaust system away from the engine.

(2) INSPECTION

(a) Inspect the components of the exhaust system for signs of cracking. Have any cracks repaired by an FAA-approved or Cub Crafters-approved repair facility. If the cracking is excessive, replace the exhaust system component(s).

WARNING
CRACKS IN THE EXHAUST SYSTEM WILL ALLOW CARBON MONOXIDE TO BE PRESENT INSIDE THE COWL. THIS MAY TRAVEL THROUGH THE FIREWALL AND INTO THE COCKPIT. CARBON MONOXIDE MAY RESULT IN DEATH. NEVER OPERATE THE AIRCRAFT WITH ANY CRACKS IN THE EXHAUST SYSTEM.

(3) INSTALLATION

(a) Install the exhaust system in the reverse order from which it was removed. Replace the gaskets on the exhaust flanges. Torque the exhaust flange nuts to 90 in-lbs.

INTENTIONALLY LEFT BLANK

6.3.14 ENGINE COWL

TABLE OF CONTENTS

1 GENERAL....2
1.1. ENGINE COWL....2
(1) COWL REMOVAL....2
(2) INSPECTION....3
(3) INSTALLATION....3
1.2. COWL FLAPS....5
(1) COWL FLAP POSITIONING....5

1 GENERAL

The engine cowl is made in two pieces and can be removed without the propeller being removed. The upper and lower portions are made of composites, using fire-resistant resins.

1.1. ENGINE COWL

Figure 6.3.14.1: Lower Access Panel

(1) COWL REMOVAL

(a) Remove screws along lower access panel. Be sure hold on to the air filter so it does not fall to the ground and carefully remove the lower access panel and air filter.

(b) Disconnect the induction tube.

(c) Carefully remove the lower access panel with the air filter.

(d) If equipped, remove the screws holding the inlet rings to the upper and lower cowl. Remove inlet rings from cowl.

NOTE

For most maintenance actions, the induction tube only needs to be disconnected from the cowling on the forward end and can be left attached to the air box on the aft end.

Formatted: Centered, No bullets or numbering

(e) Disconnect cabin heat tube from cowling, with inlet on lower right if equipped.

(f) Remove the screws holding the upper cowl to the lower cowl and the fuselage.

(g) Carefully remove the upper cowl.

(h) Remove the screws holding the lower cowl to the fuselage.

(i) Carefully remove the lower cowl, avoid contact of the front of the cowling on the spinner and the back of the cowling on the boot cowl.

(2) INSPECTION

(a) Inspect the cowl for loose rivets, wear points and cracks.

(b) Inspect cowl flaps for loose hardware and chafing.

(3) INSTALLATION

(a) Carefully position the lower cowl in place; secure the cowl to the fuselage with screws.

(b) Carefully position the upper cowl in place; secure it to the lower cowl and to the fuselage with screws.

NOTE

Start all of the screws in the upper and lower cowling then tighten the screws that hold the top to the bottom. Push the assembly up and back to close the gap at the top center. Start at the top and work down, screwing the cowling assembly to the boot cowl.

(c) Double check to make sure all the hardware is tight.

(d) Connect induction tubing to cabin heat air inlet in cowl. Reinstall the induction tubing, ensure hose is secure. Do not over-tighten.

(e) Carefully position the lower access panel in place. Secure the lower access panel to the lower cowl with screws. Verify there is clearance between the cowl and prop spinner.

(f) If equipped, reinstall inlet rings to lower and upper cowl.

Formatted: Centered

Figure 6.3.14.2: Engine Cowl Installation

1.2. COWL FLAPS

Figure 6.3.14.3: Cowl Flap Adjustment

(1) COWL FLAP POSITIONING

NOTE:
Position of Cowl Flaps should be determined by the pilot depending on weather conditions. It is recommended the flaps be in the closed position during the winter months. They can be adjusted accordingly as conditions dictate.

(a) Remove lower cowl as directed in 1.1 Cowl Removal.

(b) Remove screw (AN526C632R6), washers (AN960-6L), and nut (AN363-632) from the top and bottom of each cowl flap.

(c) Adjust cowl flap position.

(d) Install screw (AN526C632R6), washers (AN960-6L), and nut (AN363-632) on the top and bottom of each cowl flap.

(e) Reinstall lower cowl as directed in 1.1 Installation.

INTENTIONALLY LEFT BLANK

6.3.15 FUEL SYSTEMS

TABLE OF CONTENTS

1 SERVICING 2
(1) DRAINING FUEL 2
2 FUEL TANKS 3
(1) TROUBLESHOOTING 4
(2) MAINTENANCE 5
3 FUEL FILTERS 6
(1) FUEL STRAINER SERVICING 6
(2) CARBURETOR INLET SCREEN SERVICING 8
4 FUEL SELECTOR 9
5 MAINTENANCE 11

1 SERVICING

(1) DRAINING FUEL

The aircraft has two fuel drains, one under the fuselage and one on the fuel strainer, located on the engine firewall.

Some aircraft (S/N 00264 and on) have a third fuel drain located on the bottom left side of the fuselage, just aft of the firewall on the boot cowl.

CAUTION

Observe all precautions related to fueling and de-fueling the aircraft. In particular, the following are highlighted:

- **Connect grounding wire to one of the wing tie-downs and ground the aircraft to an earth ground.**
- **Do not operate any electrical equipment during the de-fueling operation.**
- **Operation of any electrical switch during the fueling operation is prohibited.**
- **Do not allow smoking or open flames within 100 feet (of the aircraft or fuel servicing vehicle are prohibited.**
- **Do not operate radios, electric system, or electronic equipment during the fueling or de-fueling operations.**
- **Do not drain fuel tanks within 100 feet of any electrical equipment capable of producing sparks.**
- **Have a suitable fire extinguisher available at all times**

(a) If your aircraft does not have the additional drain, jack the tail of the aircraft to flight level attitude. (Section 6.3.2.1 & 6.3.2.2)

(b) Open the fuel strainer drain valve(s) and allow fuel to drain into container.

(c) If the fuel has been drained and the aircraft has then been re-fueled, the engine must be run on the ground for enough time to purge the system of air prior to flight.

2 FUEL TANKS

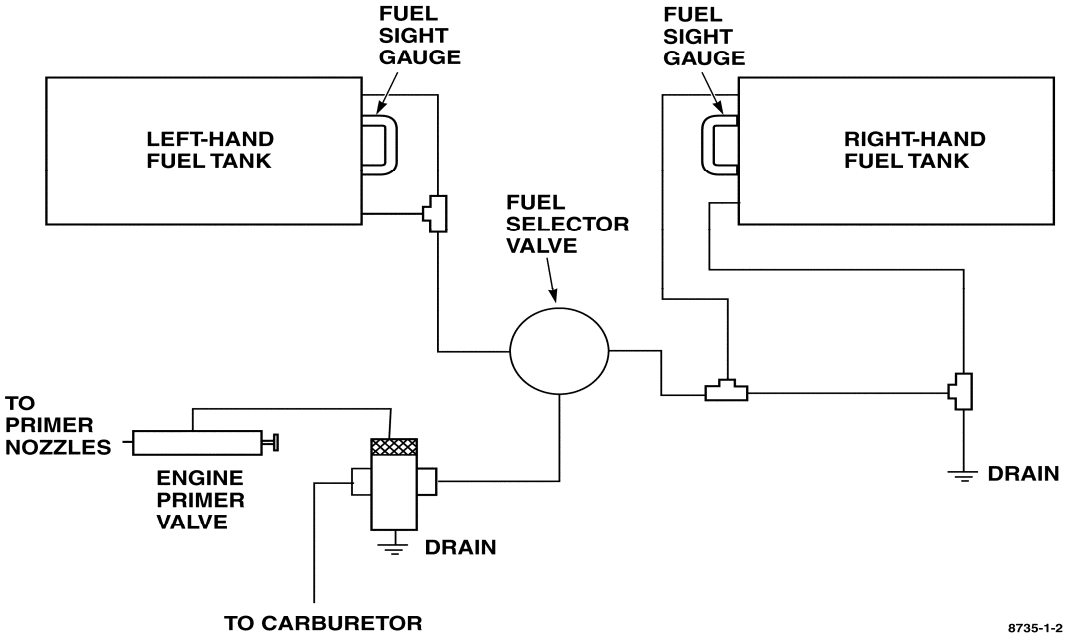

Figure 6.3.15.1: Standard Fuel System Schematic

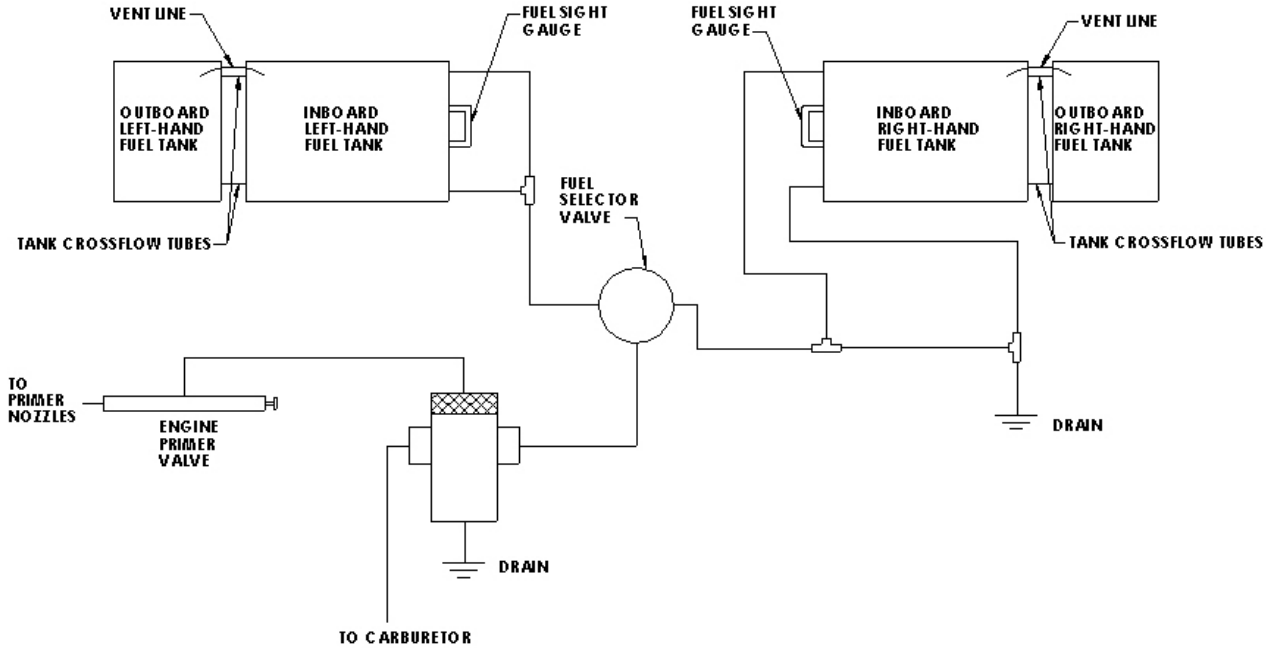

Figure 6.3.15.2: Extended Range Fuel System Schematic

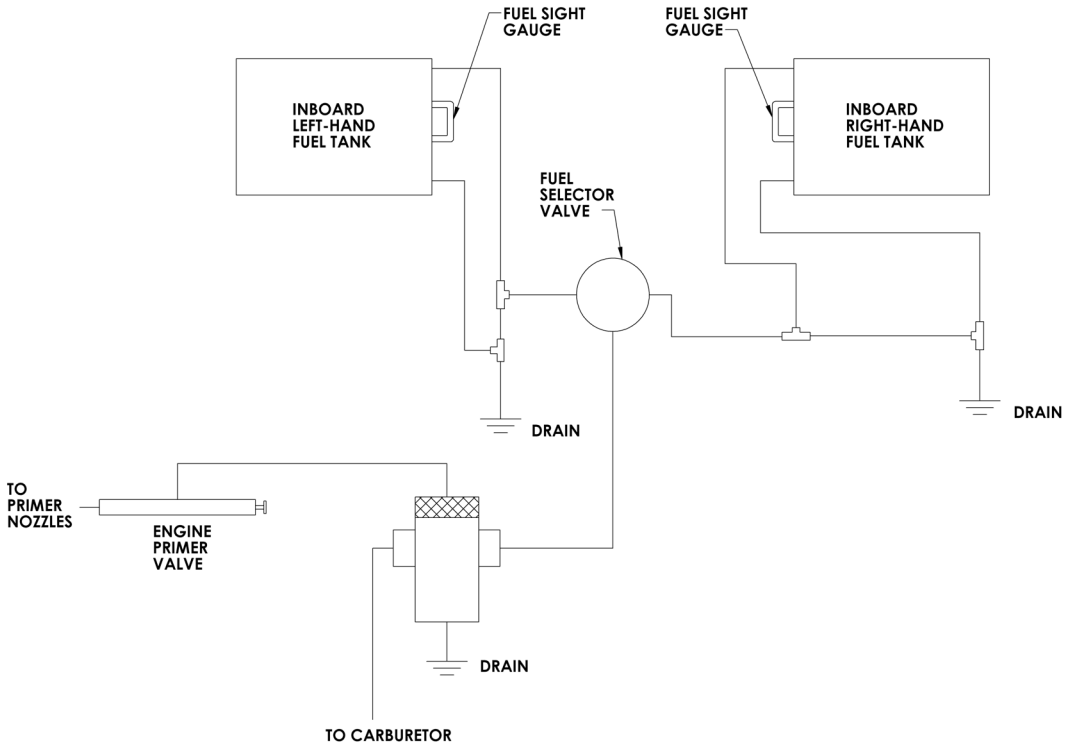

Figure 6.3.15.3: Standard Fuel System Schematic with Additional Drain

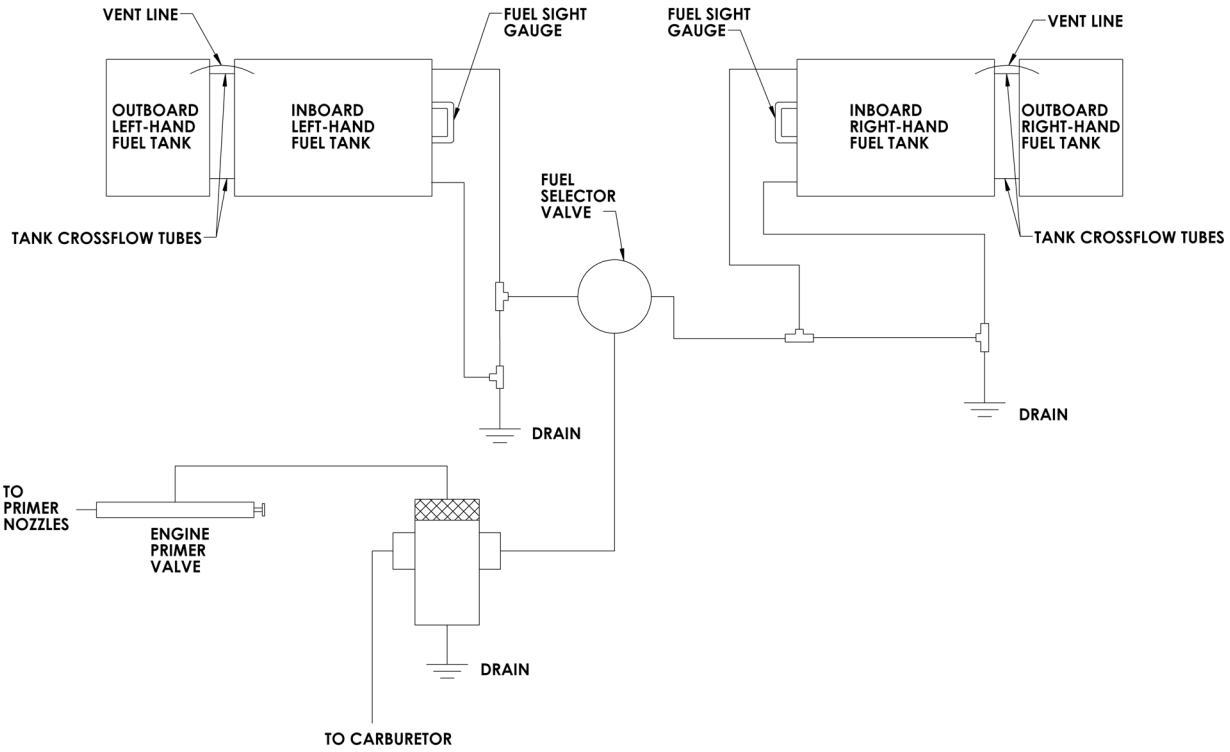

Figure 6.3.15.4: Extended Range Fuel System Schematic with Additional Drain

(1) TROUBLESHOOTING

PROBLEM	PROBABLE CAUSE	REMEDY
Filler Cap Leaks	Filler Cap Improperly Installed	Install Filler Cap Properly
	Seal Improperly Installed	Replace Fuel Cap Seal
	Deteriorated Seal	Replace Fuel Cap Seal
Leak in Fuel Line	Loose Connector(s)	Inspect and Tighten Connector(s)
	Chaffing	Replace Fuel Line
	Defective Thread	Replace Threaded Component

(2) MAINTENANCE

No major repair or alterations, as outlined in ASTM F2483, FAR 43, or in this manual are authorized at this time.

To obtain engineering approvals for any major repairs or alterations, please contact Cub Crafters at:

Cub Crafters, Inc.
1918 South 16th Avenue
Yakima, WA. 98903
Tel: 509-248-9491
support@cubcrafters.com

3 FUEL FILTERS

(1) FUEL STRAINER SERVICING

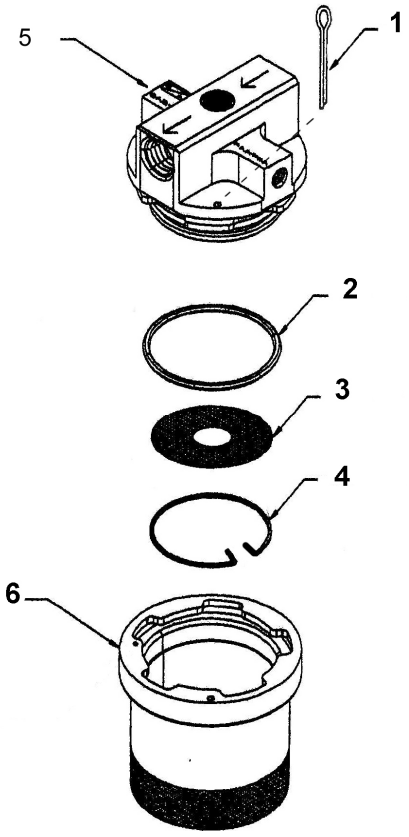

1. – Cotter Pin	2. – O-Ring	3. – Screen
4. – Clip	5. – Top Support	6. – Bowl

Figure 6.3.15.5: Fuel Strainer Assembly

(a) Turn fuel selector to “OFF” position.

(b) Drain fuel from strainer.

(c) Remove the cotter pin (1) that locks the bowl (6).

(d) Place a metal container under the bowl to catch the residual fuel.

(e) Twist bowl (6) to remove and empty the residual fuel.

(f) Remove the wire snap ring (4) with fingers and gently remove the screen (3).

(g) Inspect and clean the screen (3).

(h) Check the condition of the O-ring (2).

(i) Carefully install the screen (3) and hold it in place with the wire snap ring (4).

(j) Insert and twist the bowl (6) into position.

(k) Install the safety cotter pin (1).

(l) Turn on fuel and check for leaks.

(2) CARBURETOR INLET SCREEN SERVICING

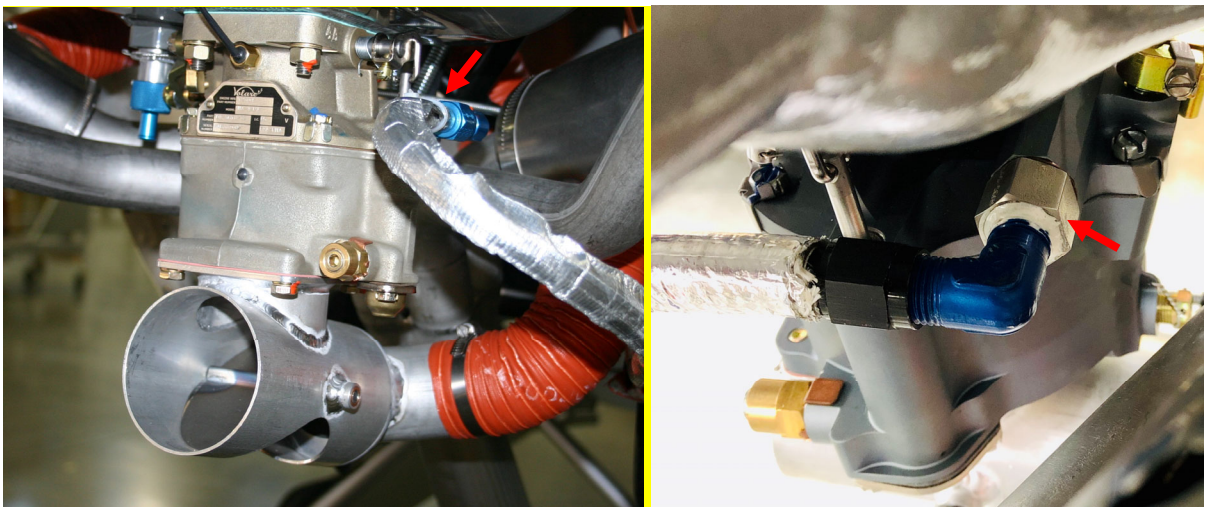

(a) Turn fuel selector to “OFF” position.

(b) Remove fuel line from carburetor.

Figure 6.3.15.6: Carburetor Inlet Screen

(c) Remove AN fitting the line is screwed onto.

(d) Remove stainless steel fitting the AN fitting was screwed into.

(e) Clean screen, any contaminates will be on the inside.

(f) Reinstall screen making sure a new copper crush gasket (MC16-A36) is in place. Tighten the stainless steel fitting with a torque of 10 to 12 foot pounds or as otherwise specified by the manufactures instructions.

(g) Reinstall AN fitting using a small amount of EZ TURN Lubricant on the pipe threads.

(h) Reattach the fuel line to the AN fitting.

(i) Turn fuel selector to “BOTH” position. Check for any leaks.

4 FUEL SELECTOR

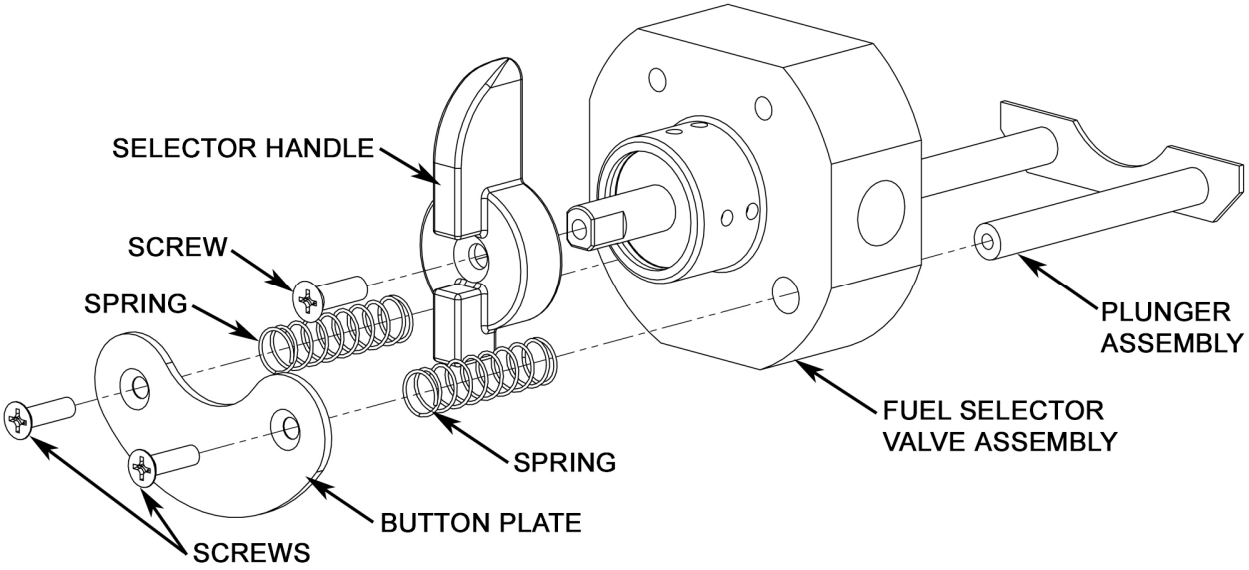

Figure 6.3.15.7: Fuel Selector Assembly

(1) FUEL SELECTOR OVERHAUL

(a) Drain the fuel tanks through the drains located on the underside of the fuselage and fuel strainer.

(b) Drain the remaining fuel out the fuel strainer drain.

(c) Remove the selector handle and handle button plate with the springs by loosening the screws.

(d) Put a rag under the valve to catch any residual fuel.

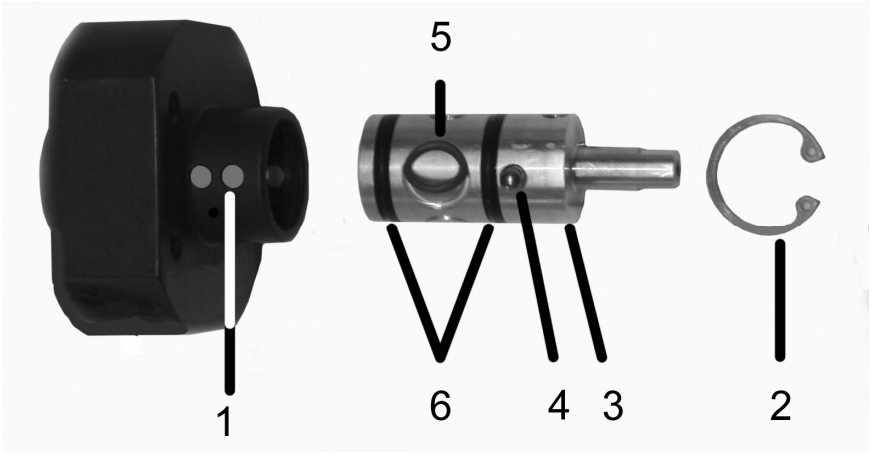

1. – Detent Holes
2. – Snap Ring
3. – Barrel
4. – Detent Balls and Springs
5. – Small O-Ring
6. – Large O-Rings

Figure 6.3.15.8: Fuel Selector Detail

Refer to Figure 6.3.15.6

(e) Rotate the shaft so the detent balls (4) are between the detent holes (1).

(f) Remove the snap ring (2) holding the handle barrel (3) in the housing.

(g) Carefully pull the barrel (3) out of the housing with fingers positioned to catch each set of balls and springs (4).

(h) Remove the small O-ring (5) and the large O-rings (6), then clean the barrel.

(i) Inspect for wear and grooves.

(j) Replace the small O-ring (5) and the large O-rings (6) with new and lube on installation.

(k) Insert the barrel (3) part way in the housing.

(l) One set at a time, insert a spring with a ball (4) on each end and push the barrel the rest of the way in.

(m) Secure with the snap ring (2).

(n) Check the operation for positive detent and smooth turning.

(o) Remove the rag.

(p) Reattach the cover and the handle stop plate with the springs and the handle.

(q) Check to make sure the handle stop is working properly.

5 MAINTENANCE

No major repair or alterations, as outlined in ASTM F2483, FAR 43, or in this manual are authorized at this time.

To obtain engineering approvals for any major repairs or alterations, please contact Cub Crafters at:

Cub Crafters, Inc.
1918 South 16th Avenue
Yakima, WA. 98903
Tel: 509-248-9491
support@cubcrafters.com

INTENTIONALLY LEFT BLANK

6.3.16 PROPELLERS

TABLE OF CONTENTS

1 CATTO PROPELLER 2
(1) TROUBLESHOOTING 2
(2) REMOVAL 2
(3) INSPECTION 2
(4) INSTALLATION 3
2 MAINTENANCE 4

1 CATTO PROPELLER

(1) TROUBLESHOOTING

If the propeller-engine combination feels rough in flight;

(a) Check that the mounting face of the propeller is tight against the engine flange and check the blade track.

(b) Verify that the attaching bolts have reached their required torque and have not bottomed out of the threads.

(c) Remove the propeller, rotate it 180 degrees on the engine crankshaft flange, and re-install. Again, check the blade track.

(d) If roughness or vibration is still present, dynamic propeller balancing may be required.

(2) REMOVAL

(a) Remove the spinner.

(b) Cut and remove the safety wire from the propeller bolts.

(c) Remove the propeller bolts. Assistance may be needed to hold the propeller and aft spinner bulkhead.

(3) INSPECTION

(a) Examine the propeller blades for corrosion, cracks, nicks, or dents beyond the permissible limits. These limits will be found in the propeller manufacturer's service manuals. If the propeller is unserviceable, replace it with a new one and return the damaged propeller to the factory. Remove the spinner.

(b) Inspect the attaching bolts for worn or damaged threads and heads. Replace damaged bolts with new ones.

(c) Inspect the spinner bulkheads for cracks or broken brackets. Replace if any damage is noted.

(4) INSTALLATION

The following instructions are a general guide. Defer to propeller manufacturers detailed instructions as required.

(a) Thoroughly clean the surfaces of the crankshaft flange and pilot stub, the rear/mounting face of the propeller, and the pilot bore. Carefully examine each surface and especially examine the end of the crankshaft pilot stub. Even minor nicks or burrs must be smoothed.

(b) MAKE SURE the propeller attaching bolts and the threads in the drive bushings or retaining nuts are clean and dry.

(c) Turn ignition switch to OFF, and ensure that all circuit breakers are pulled.

(d) Place the spinner backing plate on the crankshaft flange ensuring the prop blade orientation is correct.

(e) Position the propeller in the correct orientation. Tighten the bolts snug.

(f) BE SURE the spinner backing plate is positioned properly on the flange bushings before you torque the bolts.

(g) Apply torque in several increments, working diagonally across the bolt circle until reaching proper torque.

Catto Propellers Wood/Composite
420 in-lbs

(h) Check to make sure the propeller track is within 1/8-inch.

(i) Install 0.041-inch diameter stainless steel safety wire in the propeller bolt heads locking bolt heads together in a tightening moment. It is recommended that bolts be wired in pairs, twisting the wire between the bolt heads.

2 MAINTENANCE

No major repair or alterations, as outlined in ASTM F2483, FAR 43, or in this manual are authorized at this time.

To obtain engineering approvals for any major repairs or alterations, please contact Cub Crafters at:

Cub Crafters, Inc.
1918 South 16th Avenue
Yakima, WA. 98903
Tel: 509-248-9491
support@cubcrafters.com

6.3.17 ELECTRICAL POWER SYSTEMS

TABLE OF CONTENTS

1 GENERAL....2
2 TROUBLESHOOTING....3
3 STARTER....4
(1) GENERAL....4
(2) TROUBLESHOOTING....5
(3) REMOVAL....5
(4) INSPECTION....5
(5) INSTALLATION....5
2 ALTERNATOR....6
(1) GENERAL....6
(2) REMOVAL....6
(3) INSPECTION....6
(4) INSTALLATION....6
4 MAIN BATTERY....7
(1) REMOVAL....7
(2) INSPECTION....7
(3) CHARGING....7
(4) INSTALLATION....8
5 IGNITION BACKUP BATTERY....8
(1) REMOVAL....8
(2) INSPECTION....8
(3) CHARGING....8
(4) INSTALLATION....9

1 GENERAL

No major repair or alterations, as outlined in ASTM F2483, FAR 43, or in this manual are authorized at this time.

To obtain engineering approvals for any major repairs or alterations, please contact Cub Crafters at:

Cub Crafters, Inc.
1918 South 16th Avenue
Yakima, WA. 98903
Tel: 509-248-9491
support@cubcrafters.com

2 TROUBLESHOOTING

PROBLEM	PROBABLE CAUSE	REMEDY
No Operation	Engine speed too low	Check for output at higher speed
	Blown fuse(s)	Replace fuse(s)
	Bad Wire Connections	Replace bad connectors
	Drive belt broken	Replace belt
	Regulator Faulty	Replace regulator
	Alternator Faulty	Overhaul or replace alternator
Low Voltage	Engine speed too low	Increase engine speed
	Very Low Battery	Charge battery
	Bad battery (shorted cell)	Replace battery
	Load exceeds alternator output	Decrease load or increase engine RPM
High Voltage	Bad battery (open)	Check connections and/or replace battery
	Bad regulator (integral to alternator)	Replace/Repair Alternator

Refer to Figure 5.4.14.1, Figure 6.3.17.4, and use a high-impedance (preferably digital) volt/ohmmeter (DVM) to make the following checks.

WARNING
THE ENGINE SHOULD NOT BE RUNNING AND THE IGNITION SWITCHES SHOULD BE OFF!

(a) Turn all switches off. Use the lowest resistance scale on the DVM. Check the resistance between the battery negative (-) terminal and the engine case. Measurements over 0.5 Ohm in either cause should be investigated. If this is the case, check the engine ground strap and the battery ground strap for loose or contaminated connections, broken conductors or bad crimp joints. If these measurements are less than 0.5 Ohm, any of these points may be used as reference (-) for the following measurements.

(b) Turn on the master switch. Measure the voltage on the battery bus and on pin + of the regulator. The voltages should be equal, within 0.2 volts. A difference of more than 0.2 volts may be caused by a bad breaker.

(c) Try a 5 pound pull test on all crimp joints and make sure that the terminals are crimped on the wire, not the insulation.

(d) Troubleshoot systems to determine the root cause of the problem.

3 STARTER

(1) GENERAL

The starter is a 12 Volt High-Torque starter with a built in electro-mechanical pinion to actuate the gear.

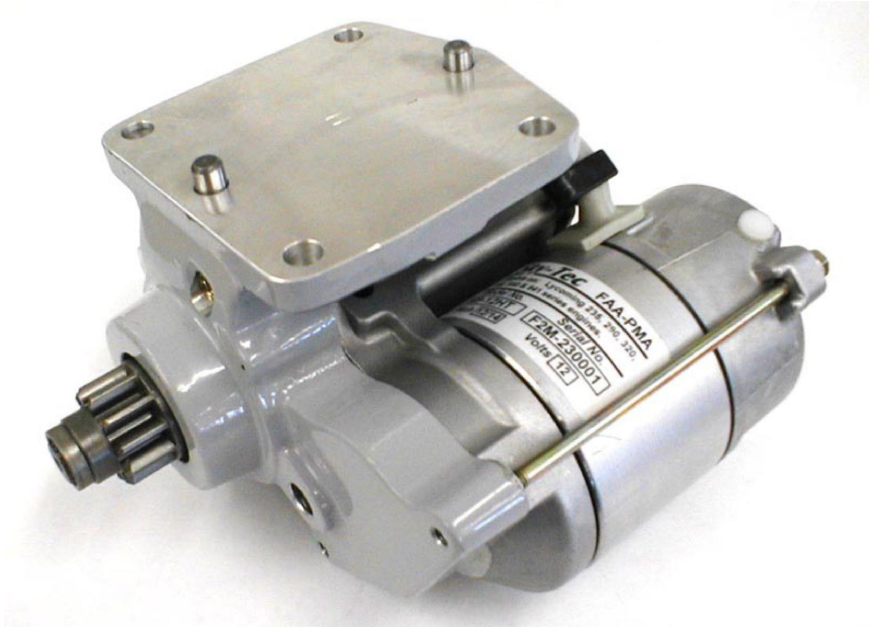

Figure 6.3.17.1: Starter

Figure 6.3.17.2: Hartzell Starter

(2) TROUBLESHOOTING

PROBLEM	PROBABLE CAUSE	REMEDY
Starter turns engine slowly when cold	Weak battery	- Charge battery - Test - Replace, if necessary
Starter turns engine slowly when hot	Bad connection, cable, or solenoid	- Clean connections and/or - replace faulty component
When starter engages, it makes a loud grinding noise	Starter damaged by engine kicking back	- Correct the ignition problem - Repair or replace starter
When the starter is engaged, there is a click and the engine does not turn	Voltage not getting to starter Starter solenoid defective	- Replace starter solenoid
Starter drive gear stays engaged for some length of time after the ignition switch is released	Stuck starter solenoid	- Replace faulty starter solenoid - Replace or repair starter

(3) REMOVAL

(a) Disconnect the power cable.

(b) Unbolt the starter attachment bolts and nuts.

(c) Retain all existing attach hardware except lock washers which will be replaced.

(4) INSPECTION

(a) Visually inspect the teeth of the starter gear and starter's housing for damage.

(b) Visually inspect electrical connections on the starter.

(5) INSTALLATION

(a) Secure the starter using the original hardware minus new lock washers.

(b) Torque the bolts and/or nuts.

(c) Attach the power cable using the nut and new lock washer. Torque the nut.

CAUTION
Do not over torque the nut on the stud.

2 ALTERNATOR

(1) GENERAL

The alternator is a belt-driven, 40 ampere, internally regulated alternator.

Figure 6.3.17.3: Alternator

(2) REMOVAL

(a) Disconnect the wires

(b) Remove the mounting bolts.

(3) INSPECTION

(a) Check belt for cracking or fraying and replace if defective.

(b) Verify belt tension according to the SSC50000 CC340 Engine Manual, §7.29.

(c) Inspect the alternator for general condition. Broken wires or damaged connectors may be corrected in the field. All other repairs must be carried out by qualified personnel as described in Section 6.1 of this manual.

(4) INSTALLATION

(a) Locate the alternator in place.

(b) Secure the alternator with the mounting bolts; set the belt tension according to the SSC50000 CC340 Engine Manual, §7.29. Torque the bolts.

(c) Attach the alternator wires

4 MAIN BATTERY

The battery is a 12 Volt lead acid battery. It is sealed and does not require electrolyte replenishment. Inspect every 100 hours for physical condition and cleanliness.

(1) REMOVAL

(d) Remove the pins from each side of pilot's seat base.

(e) Slide the seat fully forward and lift the seat aft.

(f) Disconnect the battery cables and remove the battery.

(2) INSPECTION

(a) Inspect the battery and terminals for condition and corrosion.

(b) Clean as required.

(c) If necessary, charge the battery in accordance with the following instructions.

(3) CHARGING

NOTE
Charging should be conducted in an environment between 70º F and 90º F (20ºC and 30ºC). The battery capacity may vary if charged outside of this recommended temperature range.

NOTE
If battery becomes very hot to touch, cease charging and allow battery to cool down.

NOTE
Voltage reading should be a minimum of 12.8-13.0 volts after charging. If voltage reading using voltmeter is not 12.8 volts or more, repeat charging cycle.

(a) The battery may be charged using a 12 volt, 1 ampere battery charger.

(b) Charging time using a 1 amp charger is 4.5 hours; charging rate will vary depending on the type of charger used. If a trickle charger is used, charging time may be longer.

State of Charge	Voltage Reading on Voltmeter (Volts)
100%	13.0
75%	12.8
50%	12.5
25%	12.2
0%	12.0 or less

Table 6.3.17.1: Battery Voltage Reading using a Voltmeter

(4) INSTALLATION

(c) Place the battery in the mounting space.

(d) Connect the positive lead.

(e) Connect the ground lead.

(f) Reinstall the pilot's seat by securing with the pins.

5 IGNITION BACKUP BATTERY

The battery is a 12 Volt lead acid battery. It is sealed and does not require electrolyte replenishment.

(1) REMOVAL

(a) Remove right forward interior panel.

(b) Release 4 quick-turn fasteners and remove battery cover bracket.

(c) Remove battery.

(d) Disconnect terminals.

(2) INSPECTION

(a) Inspect the battery and terminals for condition and corrosion.

(b) Clean as required.

(c) If necessary, charge the battery in accordance with the following instructions.

(3) CHARGING

NOTE
Charging should be conducted in an environment between 70º F and 90º F (20ºC and 30ºC). The battery capacity may vary if charged outside of this recommended temperature range.

NOTE
If battery becomes very hot to touch, cease charging and allow battery to cool down.

NOTE
Voltage reading should be a minimum of 12.5-13.0 volts after charging. If voltage reading using voltmeter is not 12.5 volts or more, repeat charging cycle.

NOTE
Do not use greater than 2 ampere battery charger to charge ignition backup battery.

(a) The battery may be charged using a 12 volt, 1 ampere battery charger.

(4) INSTALLATION

(a) Connect negative lead, the black heat shrink covered wire, to battery.

(b) Connect positive lead, the wire with white silicone tube over it, to battery.

(c) Place the battery in the mounting space.

(d) Place cover over battery and secure 4 quick turn fasteners.

(e) Reinstall right forward interior panel.

NOTE
Ensure that both forward interior panels are outboard of the forward vertical structural tubes. This will ensure that the interior panels will not interfere with the rudder pedals.

INTENTIONALLY LEFT BLANK

6.3.18 POWERPLANT - IGNITION

TABLE OF CONTENTS

1 SPARK PLUGS 2
(1) REMOVAL 2
(2) INSPECTION 2
(3) INSTALLATION 2
2 ELECTRONIC IGNITION 3
(1) REMOVAL AND INSPECTION 4
(2) INSTALLATION 4

1 SPARK PLUGS

(1) REMOVAL

(a) Remove spark plug caps.

(b) Remove the spark plugs.

(2) INSPECTION

(a) Inspect the firing end of the spark plugs for any foreign material lodged between electrodes or around the insulator that could be conductive. Clean as needed.

(b) Check the electrode gap. It should be between .032-.040. Re-set if necessary.

(c) Check connector for any abnormalities and clean if needed.

(3) INSTALLATION

(a) Apply a small amount of Spark Plug Thread Lubricant (Refer to Section 6.2.3) to the threaded area of each spark plug at the firing end. Install the plugs and torque to 15 ft/lb.

(b) Connect the spark plug caps.

2 ELECTRONIC IGNITION

The ignition system on the engine uses two Plasma III ignition modules (from Light Speed Engineering) and a Direct Crank Sensor system with magnets in the ring gear to provide the triggers for timing. The firing order is 1,3,2,4.

The dual system is connected such that each system knows if the other one is operating. If one of the two systems is turned off or has failed, the remaining system will automatically shift its timing curve to provide optimum engine performance with one system. This eliminates the common power loss when one magneto is turned off. The extremely wide operating voltage range, from 5v-35v allows hand starting long after the electric starter has stopped due to a low battery.

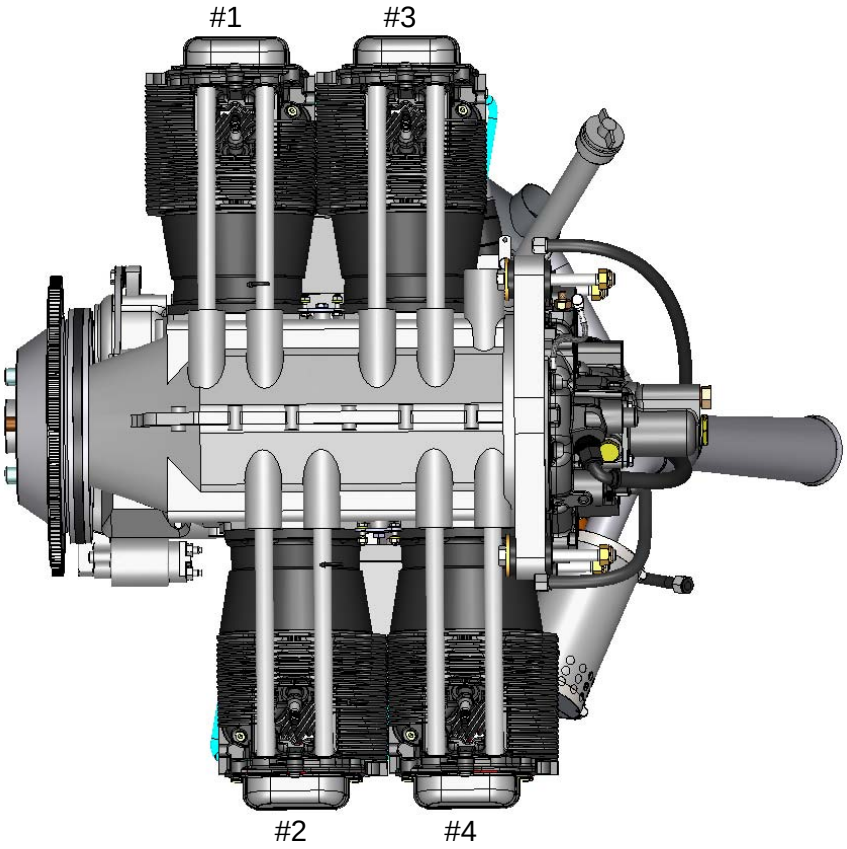

Figure 6.3.18.1: Cylinder Arrangement (Seen from above)

(1) REMOVAL AND INSPECTION

(a) Refer to the CC340 Engine Maintenance Manual and manuals from Light Speed Engineering for the Plasma III ignition system.

(2) INSTALLATION

(a) Refer to the CC340 Engine Maintenance Manual and manuals from Light Speed Engineering for the Plasma III ignition system.

Cub Crafters, Inc.
1918 South 16th Avenue
Yakima, WA. 98903
Tel: 509-248-9491
support@cubcrafters.com

6.3.19 ELECTRICAL

TABLE OF CONTENTS

1. GENERAL....2
2. LANDING AND TAXI LIGHTS....3
3. INCANDESCENT LIGHTING SYSTEM....3
4. LIGHTWEIGHT LED NAVIGATION LIGHTS AND ANTI-COLLISION....4
5. CABIN LIGHTING....4

1. GENERAL

This chapter contains information for troubleshooting, removal, installation and adjustments of the interior and exterior lighting systems used on the airplane.

Exterior lighting is optional. Options are incandescent navigation lights, incandescent navigation lights with anti-collision lights, or lightweight LED Navigation with anti-collision lights. There is one landing/taxi light on the leading edge of the left wing. The flight instruments are unlit but glass panel and/or GPS units are integrally lighted. There is a map light located on the upper right panel in the cockpit.

WARNING:
ALWAYS DISCONNECT THE POWER SUPPLY PRIOR TO SERVICING ANY PORTION OF THE ELECTRICAL SYSTEM. ENSURE THAT THE MAIN POWER SWITCH IS IN THE OFF POSITION; THEN REMOVE THE NEGATIVE BATTERY CABLE FOLLOWED BY THE POSITIVE BATTERY CABLE.

CAUTION:
Always wear clean cotton gloves when working with light bulbs. Never allow the glass portion of the light bulb to come into contact with exposed skin. Oils from the exposed skin will cause premature bulb failure.

2. LANDING AND TAXI LIGHTS

The landing/taxi light consists of one PAR 36 type lamp mounted in the left wing leading edge. The light is covered with a Plexiglas lens the same shape of the leading edge. A breaker switch on the instrument panel turns on the light.

(1) REMOVAL

(a) Remove the lens

(b) Remove 4 screws and the lamp.

(c) Disconnect wiring.

(2) INSTALLATION

(a) Attach wiring.

(b) Reposition front mounting plate and secure with 4 screws.

(c) Reattach the lens being very careful not to crack the Plexiglas.

3. INCANDESCENT LIGHTING SYSTEM

(1) TROUBLESHOOTING

PROBLEM	PROBABLE CAUSE	REMEDY
Bulb does not light up	Bulb burnt out	Replace bulb
	Circuit breaker tripped	Reset circuit breaker
	Loose wiring	Check wiring to bulb

(2) NAVIGATION LIGHTS

(1) GENERAL

The colors of the navigation lights conform to standard aeronautical practice. The left wing navigation light is red, the right wing navigation light is green and the tail navigation light is white. A breaker switch on the instrument panel turns on all three lights.

(2) REMOVAL

(a) Wing tip - Remove the light shield lens and unscrew the bulb. Be careful not to drop the glass lens or the gasket.

(b) Tail - Remove the lens retainer and lens and unscrew the bulb. Be careful not to drop the glass lens or the gasket.

(3) INSTALLATION

(a) Wing tip - Insert the bulb and reinstall the lens and the shield.

(b) Tail - Insert a bulb and reinstall the lens and the lens retainer.

(3) ANTI-COLLISION LIGHTS

(1) GENERAL

(a) The anti collision lights are integral to Navigational lighting system. A breaker switch on the instrument panel turns it on.

(2) REMOVAL

(a) Refer to Navigational light section

(3) INSTALLATION

(b) Refer to Navigational light section

4. LIGHTWEIGHT LED NAVIGATION LIGHTS AND ANTI-COLLISION

(1) GENERAL

The LED navigation and anti-collision lights are integrated into single solid units. Two breaker switches on the instrument panel turn them on. The NAV lights switch controls the Navigation Lights and the STROBE switch controls the anti-collision lights. The NAV lights must be on for the strobes to activate.

5. CABIN LIGHTING

The map light is mounted on the right hand interior wing root panel. It is run by its own 4 IEC LR4 alkaline coin cell batteries. The life time is rated for 130 hours.

6.3.20 STALL WARNING SYSTEM

TABLE OF CONTENTS

1. GENERAL....2
2. STALL WARNING SWITCH ADJUSTMENT....2

1. GENERAL

The stall warning system is electrically powered and is made up of a horn and an actuating switch. The horn is mounted in the left wing root panel and the switch is on the leading edge of the left wing. As the stall condition progresses, the air stream lifts the switch vane, closing the circuit and activating the horn.

2. STALL WARNING SWITCH ADJUSTMENT

The stall horn should be activated at a speed that is no less than 6 MPH prior to the stall occurring in any configuration. On the other hand, the stall warning should not come on so often that it becomes a nuisance.

Figure 6.3.20.1: Stall Warning Vane

Refer to Figure 6.3.20.1

(a) Loosen the screws and slide the switch up or down. (Down will cause the horn to activate earlier and up will have the horn activate later.)

(b) Tighten the screws in the desired position.

(c) See Figure 5.4.7.1 Electrical Systems Schematic for system details.

6.3.21 HOSES AND LINES

For replacement hoses, please contact:

Cub Crafters, Inc.
1918 South 16th Avenue
Yakima, WA. 98903
Tel: 509-248-9491
support@cubcrafters.com

INTENTIONALLY LEFT BLANK

6.3.22 LEVELING

(1) GENERAL

Have a set of calibrated weighing scales available. The range should be 1000 lbs for each main and 250 lbs for the tail. Zero the scales or record the tare, as appropriate

(2) PREPARATION

(a) Place the aircraft in a hangar with the doors closed where the wind will not affect the aircraft.

(b) Place the aircraft approximately in a flight level attitude by supporting the tail wheel on a bench.

(3) LONGITUDINAL LEVELING

Place a spirit level on the open door edge as shown in Figure 6.3.22.1. Lower or raise the tail until the aircraft is level. If necessary, this may be accomplished by letting air out of the tires.

Figure 6.3.22.1: Leveling the Aircraft Longitudinally

(4) LATERAL LEVELING

Place the level on the upper forward cross tube located in the cabin just behind the windshield, as shown in Figure 6.3.22.2. Center the bubble to level the aircraft laterally.

Figure 6.3.22.2: Leveling the Aircraft Laterally

6.3.23 WEIGHING

(1) GENERAL

This section describes the methods for determining the empty weight of the aircraft and the position of its center of gravity relative to the datum.

Weight and balance limits are placed on aircraft for two reasons:

- First, the structure was designed to carry a certain weight;
- Second, the operating weight of the aircraft and the position of the center of gravity affect performance, stability, and control characteristics, particularly in stall and spin recovery.

The aircraft will only attain the performance and exhibit the handling characteristics used for certification if it is flown when the weight and the center of gravity are within the approved range.

Prior to leaving the factory, the aircraft was weighed and the C.G. location was computed. You will find this information in paragraph 6.4 of the Pilot's Operating Handbook and Aircraft Flight Manual. If it should become necessary to re-weigh the aircraft, follow the procedures given in this section.

(2) PREPARATION

(a) Clean the aircraft to remove excess dirt and grease.

(b) Remove the fuel from the aircraft. This may be accomplished by opening the fuel drains until all remaining fuel is drained.

(c) Check that the oil is full.

(d) Position the pilot's seat in the mid position.

(e) Zero the scales or record the tare, as appropriate.

(3) WEIGHING THE AIRCRAFT

(a) Place the aircraft on calibrated scales. The range of the scales should be 1000 lb. for each main wheel and 250 lb. for the tail wheel.

(b) Level the aircraft (Refer to Section 6.3.18).

(c) Record the weight of the main wheels and the tail wheel in Table 6.3.23.1 or Table 6.3.23.2 depending upon the type of landing gear installed on the aircraft.

Line Number	Position	Recorded Weight	Tare	Actual Weight	Arm	Moment
1	Left Main Wheel				62.50 in.	
2	Right Main Wheel				62.50 in.	
3	Tail Wheel				261.90 in.	
	TOTAL WEIGHT (Weight in Lines 1+2+3)				**TOTAL MOMENT** (Moment in Lines 1+2+3)	

Table 6.3.23.1: Standard Landing Gear Weighing Form

Line Number	Position	Recorded Weight	Tare	Actual Weight	Arm	Moment
1	Left Main Wheel				59.50 in.	
2	Right Main Wheel				59.50 in.	
3	Tail Wheel				261.90 in.	
	TOTAL WEIGHT (Weight in Lines 1+2+3)				**TOTAL MOMENT** (Moment in Lines 1+2+3)	

Table 6.3.23.2: 3X3 Landing Gear Weighing Form

(d) Compute the empty weight of the aircraft and position of center of gravity.

EMPTY WEIGHT OF AIRCRAFT = TOTAL WEIGHT (Lines 1+2+3)

= _____ lb.

POSITION OF CENTER OF GRAVITY = TOTAL MOMENT ÷ TOTAL WEIGHT

= _____ ÷ _____

=_____

(e) Record new empty weight and position of center of gravity in section 6 of the Pilot's Operating Handbook and Aircraft Flight Manual.

6.3.24 PARKING AND MOORING

TABLE OF CONTENTS

1 PARKING 2
2 MOORING 2
3 STORAGE 4
3.1. GENERAL 4
3.2. MAINTENANCE PRACTICES 4
(1) TEMPORARY STORAGE - 30 to 90 Days 4
(2) INDEFINITE STORAGE 5
(3) PREPARATION FOR SERVICE 6

1. PARKING

(a) Position the airplane on level surface, headed into wind.

(b) Set the parking brakes. The parking brake valves are located on the forward portion of the passenger rudder pedals. To engage, press both brake pedals and turn the brake valve to the horizontal position.

(c) A good practice is to position the propeller in an angled or horizontal position when parked.

(d) Chock the main gear wheels.

(e) In gusty or stormy weather, moor the airplane.

(f) When the aircraft is to be parked for an extended time, it should be moved frequently to prevent corrosion in the wheel bearings and getting flat spots on the tires.

2. MOORING

(a) Position the airplane on level surface and headed into the wind.

(b) Set the parking brakes. The parking brake valves are located on the forward portion of the passenger rudder pedals. To engage, press both brake pedals and turn the brake valve to the horizontal position.

(c) A good practice is to position the propeller in an angled or horizontal position.

(d) Chock the main gear wheels.

(e) Tie mooring lines. (Figure 6.3.24.1) There are two tie-down rings underneath each wing next to the forward lift strut. The tail should be tied down by wrapping chain/rope (at least once) around the tail wheel head. In severe weather, use multiple lines. During gusty or high wind conditions, mooring lines may require periodic tightening to prevent excessive movement of airplane. Use a secure knot such as a bowline knot to ensure security.

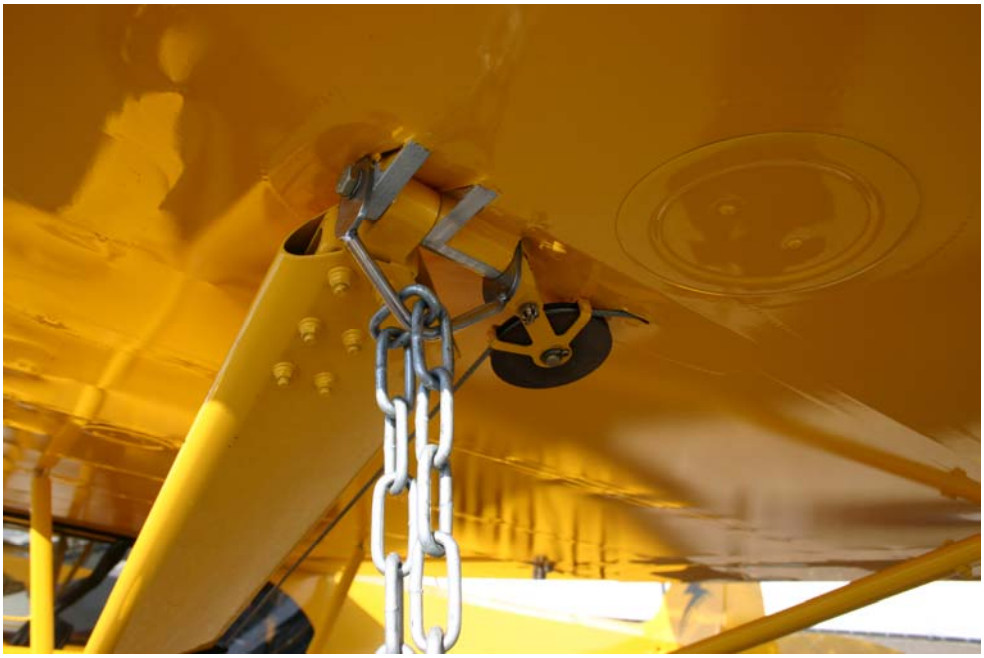

Figure 6.3.24.1: Wing Tie Down

Figure 6.3.24.2: Tailwheel Tie Down

3. STORAGE

3.1. GENERAL

The procedures outlined in this section must be followed if it is expected that the aircraft will remain inactive for longer than 30 days.

3.2. MAINTENANCE PRACTICES

(1) TEMPORARY STORAGE - 30 to 90 Days

(a) Park and moor the airplane.

(b) Apply engine preservation. In extremely cold weather, it is advisable to drain the oil sump immediately after stopping for a long period and to warm the oil to 100°F before refilling the sump. To prevent excessive cooling of the oil sump and excessively high oil viscosity in cold weather, the sump may be covered with an oil-proof lagging. Refer to the latest edition of Manufacture's Service Letter.

(c) Fill the fuel tanks completely. Check for water accumulating each week.

(d) Wipe the tires with dry cloth, and treat them with tire protector spray. Mark the tire positions and date with chalk. Turn the wheels and check air pressure regularly.

(e) Remove the battery (Refer to Chapter 6.3.14) and ELT battery (Refer to Chapter 5.4.14) and store in accordance with standard practices. Clean the battery compartment and the battery cable terminals to neutralize any battery acid that may be present.

(f) Lubricate according to lubrication schedule. (Refer to Chapter 6.2.3)

(g) Clean the propeller to remove dirt, oil, and bug accumulation. A good practice is to position the propeller in an angled or horizontal position.

(h) Clean and cover the instruments and panel. Observe any additional precautions recommended by the various manufacturers of the avionics and the instruments.

(i) Clean and install protective covers on the seats.

(2) INDEFINITE STORAGE

CAUTION
Do not set the parking brake as brake seizing can result.

(a) Park and moor the airplane.

(b) Apply engine preservation. Refer to the latest edition of manufacturer's service letter.

(c) Drain the fuel tanks. (Refer to Chapter 6.3.12)

(d) Clean the brake assemblies. The wheels should be turned three to four revolutions per 30 days to prevent corrosion. Touch up all spots where paint has been chipped from the wheels. Wipe the tires with dry cloth, and treat with tire protector spray. Turn the wheels. Mark the tire position and date with chalk. Check the air pressure periodically and inflate the tires as necessary. (Refer to Chapter 6.2.3)

NOTE
It is advisable to use unserviceable tires for prolonged storage.

(e) Remove the battery (Refer to Chapter 6.3.14) and the ELT batteries (Refer to Chapter 5.4.14) and store in accordance with standard practices (Refer to Chapter 6.3.14). Clean the battery compartment and the battery cable terminals to neutralize any battery acid that may be present.

(f) Lubricate according to lubrication schedule. (Refer to Chapter 6.2.3)

(g) Clean the propeller to remove dirt, oil, and bug accumulation. Coat the blades with preservative oil and wrap with moisture proof material. A good practice is to position the propeller in an angled or horizontal position.

(h) Clean and cover the instruments and the panel. Take any additional precautions according to the manufacturer.

(i) Clean and install protective covers on the seats

(j) Remove all loose equipment and store.

(k) Clean and install covers over windshield and windows.

(3) PREPARATION FOR SERVICE

(a) Engine preparation for service - Refer to the manufacturer's service letter.

(b) Remove all covers, tapes and tags from airplane.

(c) Reinstall the engine battery (Refer to Chapter 6.3.14) and the ELT batteries (Refer to Chapter 5.4.14).

(d) Fill the fuel tanks (if applicable). Refer to Chapter 6.2.3.

(e) Thoroughly clean and visually inspect the airplane. It is recommended to carry out at least a 100-hour inspection prior to flying the aircraft. (Refer to Chapter 5.3)

6.4 REPAIR OF STRUCTURE & COMPONENTS

TABLE OF CONTENTS

1. GENERAL 2
2 PATCHING OF HOLES IN FABRIC, METAL, OR COMPOSITE NON-STRUCTURAL COMPONENT 2
2.1 Fabric Repairs 2
(1) APPROVED FABRIC REPAIR MATERIALS 2
(2) INSPECTION OF FABRIC 2
(3) FABRIC REPAIRS 2
(4) SIZE OF REPAIR AREA 3
(5) PATCH REPAIR LESS THAN 8 INCHES 4
(6) PATCH REPAIR MORE THAN 8 INCHES 6
(7) STITCHING 6
3 NON-STRUCTURAL SHEET METAL REPAIRS 12
3.1 Level of Certification 12
3.2 Authorized Non-Structural Sheet Metal Repairs 12
4 NON-STRUCTURAL COMPOSITE MATERIALS REPAIRS 12
4.1 Level of Certification 12
4.2 Authorized Non-Structural Composite Materials Repairs 12

1. GENERAL

This section describes the process and method of repairing fabric and non-structural metal or composite components.

2 PATCHING OF HOLES IN FABRIC, METAL, OR COMPOSITE NON-STRUCTURAL COMPONENT

2.1 Fabric Repairs

(1) APPROVED FABRIC REPAIR MATERIALS

Description	Supplier
Methyl Ethyl Ketone (MEK)	Local Supplier
Poly-Fiber	Poly-Fiber Aircraft Coating
Poly-Tak	Poly-Fiber Aircraft Coating
Poly-Brush	Poly-Fiber Aircraft Coating
Poly-Spray	Poly-Fiber Aircraft Coating
Flat Rib Lace Cord	Poly-Fiber Aircraft Coating
LOCTITE Depend 330 Adhesive	Cub Crafters or Local Supplier

(2) INSPECTION OF FABRIC

The polyester fabric used is very durable and its longevity depends on maintaining the coating in good shape. Ultraviolet radiation (in other words, direct sunlight) is the main cause of deterioration of the fabric. The fabric is treated at the factory to protect it from this type of radiation.

The fabric covering meets the requirements of TSO C-15d/AMS which stipulates that the minimum breaking strength of the fabric should be at least 56 lbs. Testing fabric requires skill and experience and should only be performed by a qualified person who has experience in this matter.

The aircraft has been covered using a process that is proprietary to Cub Crafters. It is similar to the Poly-Fiber Aircraft coating process, more commonly referred to as the Stits method.

(3) FABRIC REPAIRS

The decision to repair damage on the fabric or whether to replace the covering on the part will depend upon the extent of the damage and should take into account the aesthetics of the repair. These repairs require the use of an iron to shrink the fabric. It is very important that only a good quality clothing iron be used.

WARNING
GROUND THE STRUCTURE BEING IRONED, SANDED OR SPRAYED TO PREVENT STATIC ELECTRICITY FROM IGNITING VAPORS

(4) SIZE OF REPAIR AREA

- If the length of the damaged area is 8 inches or more, the patch must overlap the old fabric by at least 2 inches. Repairs longer than 8 inches require at least a 2 inch wide finishing tape over the seams. These tapes should be centered over the seam of the patch.

- If the length of the damaged area is less than 8 inches in length, the patch must overlap the old fabric by at least 1 inch. Finishing tapes are not required over the glued seams unless the patch is on top of the wing.

- For small fabric repairs such as stick or stone damage, where the holes are ½ inch long or less, a patch of already doped and painted fabric with the edges pinked can be used. An overlap of at least ½ inch of patch material over ½ inch of old fabric on all sides is required and it must be secured with Loctite Depend 330 Adhesive or a suitable equivalent.

- Any stitching that is removed during repair must be replaced. Use the methods given in this chapter.

(5) PATCH REPAIR LESS THAN 8 INCHES

(a) Trim any ragged edges.

(b) Lay an un-shrunk piece of material over the hole and trace the outline of the patch with a #2 pencil. Make sure to allow for enough overlap as explained earlier. Note that square or rectangular patches are preferable. Cut out the patch with pinking shears.

(c) Mask off the area outside the patch leaving an extra half-inch or so of working room around the contour of the patch.

(d) Peal the polyurethane paint off and clean all the coatings inside the masked area with MEK down to the bare fabric.

(e) Glue the patch to the old fabric with Poly-Tak and allow it to dry.

(f) With an iron set to 225ºF, smooth the glued areas.

(g) Heat-shrink the area of the patch over the hole with a 350ºF iron. This acts as a shrinking panel to re-tighten the fabric in the area of the repair. Use a piece of cardboard as a shield to keep the iron off the glued areas, if needed.

(h) Poly-Brush requires two applications. Each application consists of 2 coats.

- The first coat should be brushed on to penetrate the fabric.
- After the first coat has flashed off, apply the second coat by brushing or spraying on then allow it to dry.
- If finishing tapes are needed, attach them with Poly-Brush.
- Smooth the finish tapes with a hot iron.
- Make a second application of Poly-Brush (2 coats) allowing it to flash off in between coats. The Poly-Brush may all be brushed on if it is a small patch or sprayed if it is larger or in a high visibility area.

(i) Make 2 applications of Poly-Spray.

(j) For the first application;

- Blow and tack off the covering to be sure it is as dust free as possible.
- Spray or brush the first coat of Poly-Spray. Allow to dry for approximately 15 minutes
- Spray or brush the second coat of Poly-Spray and make sure it is dry before sanding.

(k) For the second application;

- Smooth any edges, which may be sticking up, using a small hot iron.
- Smooth tape and doubler edges using dry 320 grit sandpaper to remove surface dust bumps.
- Blow and tack off the covering to be sure it is as dust free as possible.
- Spray or brush the third coat of Poly-Spray and let dry for approximately 15 minutes.
- Spray or brush the fourth coat of Poly-Spray and let dry completely before sanding.

(l) Paint to match original paint

(6) PATCH REPAIR MORE THAN 8 INCHES

(a) For large fabric repairs such as a wing tip, start at the last good rib, or at a convenient location close to the damaged area, removing the old finish tapes.

(b) Cut the rib laces.

(c) Clean off all the coatings with MEK down to the fabric so that there is at least a 2 inch overlap over the rib.

(d) Glue a whole new piece of fabric to cover the wingtip with a 2 inch overlap over the rib area.

(e) Heat shrink.

(f) Apply the first application of Poly-Brush as described previously.

(g) Secure the fabric to the rib, in the same manner it was previously, by rib stitching or with broad-head pop rivets. For rib stitching see the instructions at the end of the Section.

(h) Apply tapes as described previously.

(i) Apply the second application of Poly-Brush as described previously.

(j) Then apply Poly-Spray as described previously.

(k) Paint to match original paint.

(7) STITCHING

A modified seine knot will be used for stitching and the knots and stitches will be hidden under the fabric. The following text and sketches describe how this is accomplished.

Tie the first loop with a square knot as illustrated in Step 1 (Figure 6.4.2) and secure the knot with a half hitch on each side after the lacing is pulled tight around the rib (Step 2 Figure 6.4.2). Then route the needle under the fabric and out through the next lace location, then back down through the wing as illustrated in Steps 3 and 4 (Figure 6.4.2). Tie a modified seine knot as illustrated in Steps 5 through 11 (See Figure 6.4.3 and Figure 6.4.4).

(a) Rotate each lace loop to place the knot at the side of the rib cap to reduce the protrusion and aerodynamic interference before moving to the next lace location, then route the cord under the fabric to the next lace location as illustrated in Step 3 and 4 (Figure 6.4.2). Cut the cord end off leaving a minimum of 1/4-inch stub pulled inside. Lacing tension should be uniform.

(b) Repeated pulling of long lengths of lacing cord may remove wax coating from the cord and cause fraying. Convenient lengths of rib lacing cord may be used to

lace long or thick ribs. Tie off the end of each length with a half hitch as illustrated in Step 10 and 11 (See Figure 6.4.4), or if needed, separate lengths of lacing cord may be joined by using the splice knot illustrated in Figure 6.4.5.

(c) Lacing is installed through other components, where applicable, in the same manner as a wing. Single, wide space lace attachments, usually used on empennage surfaces, are tied with a square knot and half hitch on each side, the same as a starting wing rib lace illustrated in Steps 1 and 2 (Figure 6.4.1). The lace may be rotated to place the knot under the fabric before cutting the cord.

(8) FABRIC RIVETS

Approved blind rivets can be used to secure the fabric to the center and trailing edge ribs in place of rib stitching. The complete process involves fabric, reinforcement tape, rivets, and cover tape as shown below.

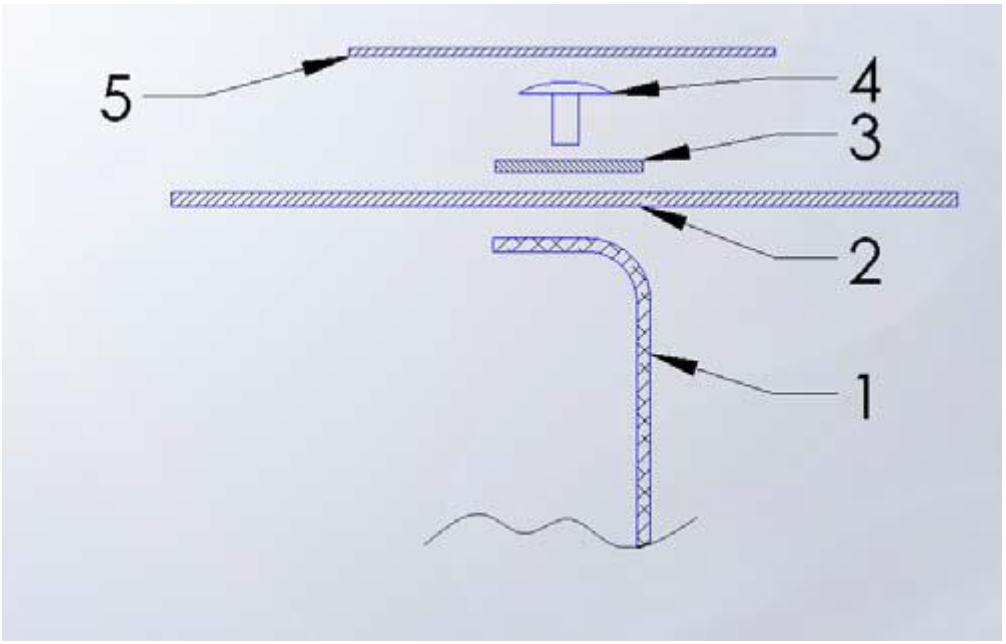

Figure 6.4.1 – Fabric Rivet Installation
(1) Rib, (2) Fabric, (3) Reinforcement Tape, (4) Rivet, (5) Cover Tape

Rivet holes should be drilled .125” centered on rib surface. Rivet hole spacing not to exceed 3.50”.

Insert approved rivets (1/8” Polyfibre flush fabric rivets) into holes. Use a pneumatic riveter set between 90-120 psi to secure rivets. All rivets should be seated flush again the reinforcement tape. Rivets that are not installed properly should be removed by drilling through their center with a .125” drill bit or smaller.

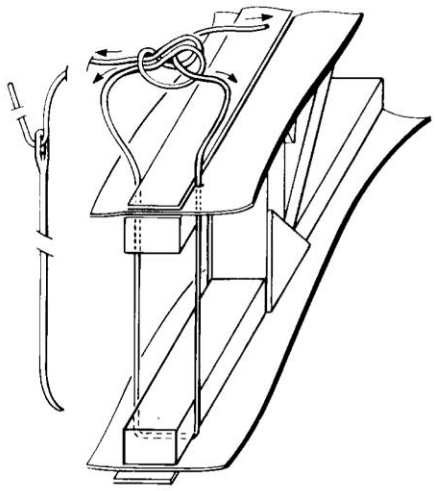

Step 1. Tie a square knot by passing the short end of the cord thru the fold-back loop, as illustrated.

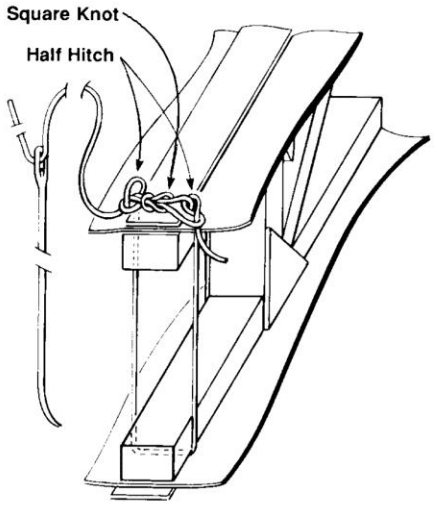

Step 2. Secure the tight square knot with a half hitch at each side.

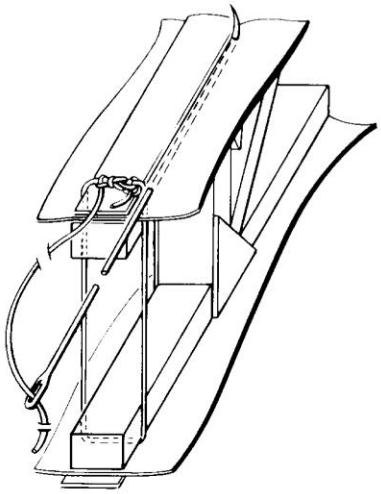

Step 3. Route the needle back thru the right hand hole and exit at the next pre-punched lacing location.

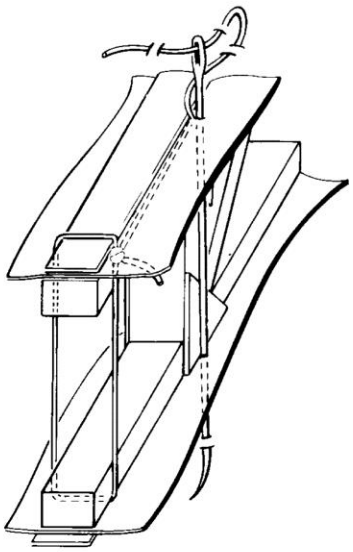

Step 4. Route the needle back thru the exit hole and thru the opposite fabric surface leaving approximately a 3" loop around a finger on the top surface.

Figure 6.4.2 - Rib Stitching, Steps 1 to 4

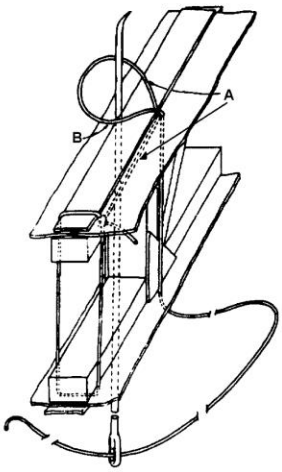

Step 5. As the needle is returned thru the top surface on the opposite side of the rib cap the loop is rotated to position cord section "A" to the forward side of the needle, then the needle is pulled thru.

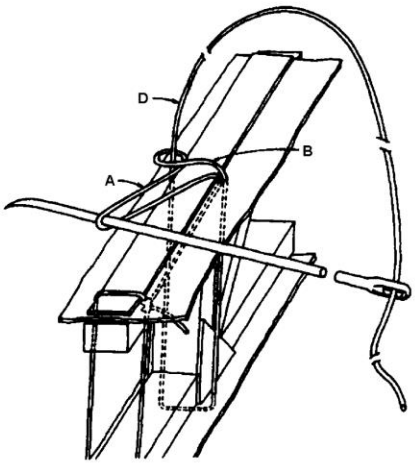

Step 6. The needle tip is routed under cord section "B" to hook and pull cord section "A" aft.

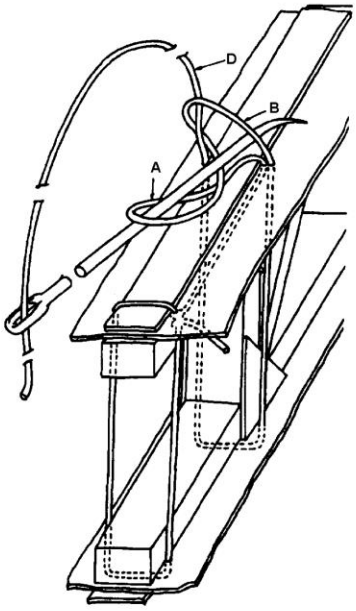

Step 7. The needle tip is then routed over the top of cord section "A" and under cord section "B."

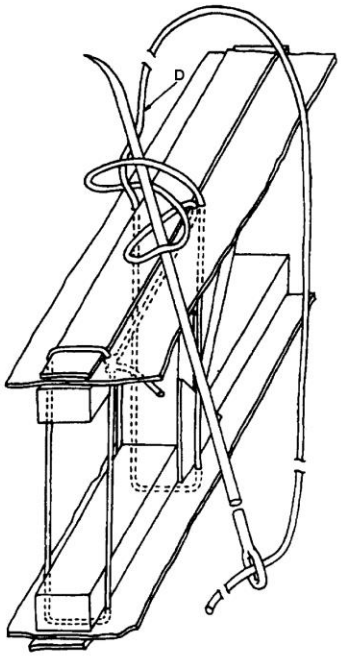

Step 8. The needle tip is then routed over cord section "D" and passed thru the lacing while holding cord section "D" perpendicular to the surface to avoid cord entanglement.

Figure 6.4.3 - Rib Stitching, Steps 5 to 8

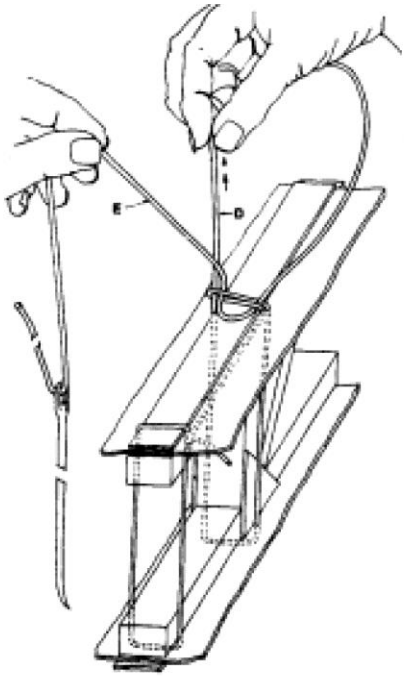

Step 9. Pull cord section "D" perpendicular to the fabric surface to remove all slack in the cord back to the last rib lacing knot while working the loose knot to the right side. Do not pull cord section "E."

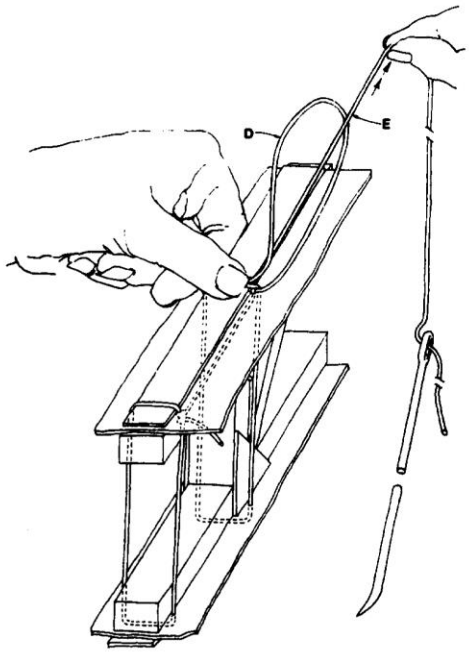

Step 10. After all slack is removed by pulling cord section "D," switch hands and place a thumbnail on the loose knot formed on the right-hand side, then secure the knot by pulling firmly perpendicular to the fabric surface on cord section "E."

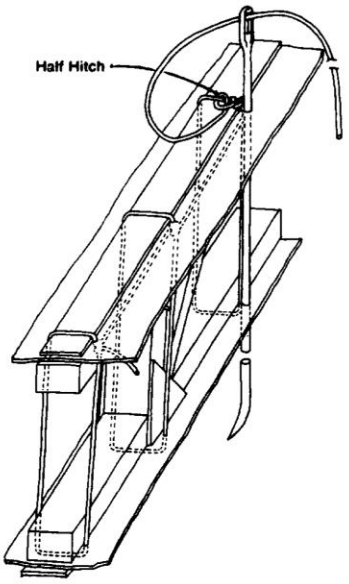

Step 11. After completing all lacing in the same sequence, the end is secured with a half hitch after the modified seine knot. The knot is pulled to the inside by routing the needle thru the wing before cutting the cord to leave the end inside.

Figure 6.4.4 - Rib Stitching, Steps 9 to 11

The splice knot is made by crossing the ends of the cord, and making four complete wraps with the small end of the free piece around the end of the standing piece. The end is then doubled back through the formed loop. The other free end is wrapped and doubled back. The long ends of the cords are then pulled until the knot is tight. The short ends are cut close to the knot. This finishes the splice knot.

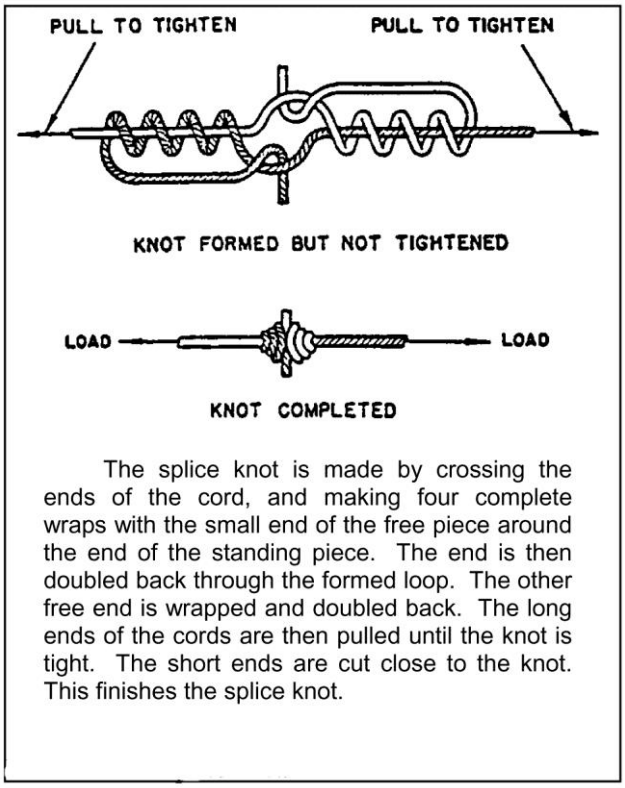

Figure 6.4.5 - Splice Knot

3 NON-STRUCTURAL SHEET METAL REPAIRS

3.1 Level of Certification

Non-structural sheet metal repairs are to be accomplished by: a certificated LSA Repairman; Maintenance Rated and FAA certified LSA Pilot /Owner; or a suitably qualified and experienced FAA certified A&P Mechanic.

3.2 Authorized Non-Structural Sheet Metal Repairs.

Damage to non-structural sheet metal parts may be repaired using the techniques of FAA Aircraft Circular 43.13. Chapter 4, Section 4. At this time repairs to primary or secondary structures by others than Cub Crafters' are not authorized. Description, by Electronic photos or similar means, of damaged primary or secondary structures, or flight control surfaces structures, are to be forwarded to Cub Crafters, Inc. accompanied by a suggested repair scheme.

4 NON-STRUCTURAL COMPOSITE MATERIALS REPAIRS

4.1 Level of Certification

Non-structural composite materials repairs are to be accomplished by: a certificated LSA Repairman; Maintenance Rated and FAA certified LSA Pilot /Owner; or a suitably qualified and experienced FAA certified A&P Mechanic.

4.2 Authorized Non-Structural Composite Materials Repairs

Damage to non-structural composite materials parts may be repaired using the techniques of FAA Aircraft Circular 43.13. Chapter 3, Section 1. At this time repairs to primary or secondary structures by others than Cub Crafters' are not authorized. Description, by photos or similar means, of damaged primary or secondary structures or flight control surfaces structures are to be forwarded to Cub Crafters, accompanied by a suggested repair scheme.

6.5 ALTERATIONS

6.5.1..... COMPLIANCE WITH MANUFACTURER'S SERVICE DIRECTIVE
6.5.2.....MAJOR REPAIRS AND/OR ALTERATIONS

6.5.1 COMPLIANCE WITH MANUFACTURER'S SERVICE DIRECTIVE

When service directives are issued, they will be in the form described in Chapter 11 of this manual. These will be issued to the owner/operators in the most current Cub Crafters database and will be in the form of safety alerts, service bulletins, and notifications.

6.5.2 MAJOR REPAIRS AND/OR ALTERATIONS

All major repairs and/or alterations require an approved MRA (Major Repair and/or Alteration) form from Cub Crafters. Requests for an MRA can be made to Customer Support at Cub Crafters, or through a form on the company website.

The latest revisions of all applicable service documents released by Cub Crafters, Inc. do not require an MRA form. These documents, which include service alerts, service bulletins, notifications, and service instructions, are considered appendices to this maintenance manual.

APPENDIX A

Inspection Forms

Scheduled Inspection Report			
Make: Cub Crafters, Inc.	Model: CC11-160	Serial Number:	Registration:
Owner:		Date:	
Type of Inspection:		Hobbs/Tach Time:	

	Visual Pre-Inspection	Ref.	Interval		Initials
			100	Special	
1	Review compliance with current Federal Aviation Regulations, including visual inspection of: - Aircraft Flight Manual - Aircraft Log Book - Registration Certificate - Weight and Balance Record - Aircraft Equipment List - FAA Airworthiness Directives - Cub Crafters' Service Documents		X		
2	Visual Inspection of Aircraft				
3	Check Oil Quantity	6.2	X		
4	Operational Check	POH/AFM	X		
5	Perform walk-around to detect fluid leaks. - Make a record of all malfunctions and discrepancies.		X		

	Engine	Ref.	Interval		Initials
			100	Special	
1	Engine:	Cub Crafters, Inc.	Refer to Maintenance Manual and CC340 Engine Manual for all service instructions.		
2	Engine Cowl: - Remove, clean and check for cracks distortion, loose, or missing fasteners.	6.3.14	X		
3	Engine Cowl Flaps (if applicable): - Adjust position as determined by weather conditions.	6.3.14		X	

	Engine	Ref.	Interval		Initials
			100	Special	
4	Engine Oil: - Drain.	6.3.10		25 hours	
5	Oil Screen - Visual inspection for foreign particles.	6.3.10		25 hours	
6	Oil Temperature Sender Unit: - Check for leaks and security.		X		
7	Oil Lines and Fittings: - Check for leaks, security, chafing, dents, and cracks.		X		
8	Oil Cooler: - Clean and check cooling fins for damage.		X		
9	Engine Oil: - Fill	6.2.3		25 hours	
10	Spark Plugs - Visual inspection and re-gap as necessary to .032-.040”	Denso IK27 or W27ESR-U	X		
11	Check Differential Cylinder Compression: Cylinder 1 _____ Cylinder 2 _____ Cylinder 3 _____ Cylinder 4 _____		X		
12	Cylinders: - Visual inspection for cracked or broken fins.		X		
13	Electrical wiring to engine and accessories: - Visual inspection and replace damaged wires and clamps. - Visual inspection of terminals for security and cleanliness.		X		
14	Ignition Harness and Insulators: - Visual inspection for high-tension leaks and continuity.		X		
15	Spark Plug High Tension Leads: - Replace every 500 hours			500 hour or 3 years	
16	Induction Air Filter: - Remove, inspect, and clean. - Replace at 500 hours, or when filter is more than 50% covered by foreign material.		X	500 hours, or 50% covered	
17	Carburetor: - Drain and clean inlet line fuel strainer.		X		
18	Induction Air Box: - Visual inspection condition.		X		

	Engine	Ref.	Interval		Initials
			100	Special	
19	Intake Seals: - Visual inspection for leaks and clamps for tightness.		X		
20	Flexible Fuel and Primer Lines: - Visual inspection condition.		X		
21	Throttle, Mixture Controls: - Visual inspection for proper travel and operating condition.		X		
22	Exhaust Stacks, Connections, Gaskets, and Braces: - Visual inspection - Replace exhaust gaskets, as required.		X		
23	Muffler, Heat Exchanger, and Hoses: - Remove shroud - Visual inspection.			50 hours	
24	Oil Breather Tube: - Visual inspection for obstructions and security.		X		
25	Crankcase: - Visual inspection for cracks, leaks, and security of case bolts.		X		
26	Engine Mounts: - Visual inspection for cracks and distortion and security.		X		
27	Engine Baffles: - Visual inspection for damage and security.		X		
28	Rubber Engine Mount Bushings: - Visual inspection for deterioration.		X		
29	Firewall and Seals: - Visual inspection		X		
30	Cabin Heater Control: - Visual inspection.		X		
31	Alternator: - Visual inspection for condition, security, and tension of drive belt.		X		
32	Starter: - Visual inspection for condition and security.		X		
33	Engine Controls: - Check travel from stop to stop and lubricate.		X		
34	Engine Cowl: - Install, ensuring good clearance.		X		

	Propeller	Ref.	Interval		Initials
			100	Special	
1	Spinner and Bulkheads: - Visual inspection for damage and security.		X		
2	Propeller Blades: - Visual inspection for nicks and cracks.		X		
3	Spinner Mounting Brackets: - Visual inspection for damage and security.		X		
4	Propeller Mounting Bolts: - Visual inspection - Check torque, if safety wire is broken.		X		

	Cabin	Ref.	Interval		Initials
			100	Special	
1	Doors: - Visual inspection for damage, operation, and security.		X		
2	Door latches and hinges: - Visual inspection and lubricate.		X		
3	Cabin Windows and Windshield: - Clean and visual inspection for cracking, crazing, and general condition.		X		
4	Upholstery: - Visual inspection for tears and fraying.		X		
5	Seat Belts, Inertia Reel, and Harnesses: - Visual inspection. - If applicable, Refer to AmSafe Supplement		X		
6	Seats: - Pilot (Front): Visual inspection and verify latch security. - Passenger (Rear): Verify top strap routing and security. Verify Seat Crossbar security.		X		
7	ELT (if applicable): - Installation and condition of battery and antenna. - Reference manufacturer's manual for replacement intervals.	ELT Manufacturer Manuals	X		
8	Battery and Cables: - Visual inspection.		X		
9	Forward Fuselage Tubes and Ignition Backup Battery (if applicable): - Remove the right forward interior panel - Replace Battery Annually - Inspect forward fuselage tubes for wear or damage.		X		

	Cabin	Ref.	Interval		Initials
			100	Special	
10	Control Bushings, Cables, and Pulleys (including control stick and torque tube): - Visual inspection and lubricate bearing surfaces only.	SB00015	X		
11	Elevator Trim: - Visual inspection of complete System - Operational check.		X		
12	Fuel Lines and Gauges: - Visual inspection for leaks, chaffing, obstruction, security, general condition.		X		
13	Flap Lever: - Operational Check - Visual inspection of ratchet and latch through the range of operation - Lubricate Shaft.		X		
14	Rudder Pedals: - Operational Check and lubricate. - Ensure that the forward edge of the interior panels are outboard of the forward vertical structural tubes by the rudder pedals.		X		
15	Throttle: - Verify freedom of movement and ensure it contacts engine stops.		X		
16	Mixture: - Verify freedom of movement and ensure it contacts engine stops.		X		
17	Carburetor Heat Control: - Verify freedom of movement and ensure full travel.		X		
18	Cabin Heater: - Verify freedom of movement and ensure full travel.		X		
19	Placards and Instrument Markings: - Visual inspection for conformity, security, and condition.		X		
20	Instrument Panel: - Visual inspection for security of lines and wiring.		X		
21	Pitot System: - Visual inspection of lines for leaks and chaffing		X		
22	Landing, Strobe, and Navigation Lights: - Visual inspection for condition and security		X		

	Cabin	Ref.	Interval		Initials
			100	Special	
	- Operational inspection.				
23	Stall Warning: - Operational inspection.		X		
24	Altimeter: - Visual and functional inspection for condition and calibration			24 mos	
25	Transponder (if applicable): - Visual and functional inspection for condition and calibration			24 mos	
26	Antennas: - Visual inspection for condition and security.		X		
27	Brake Cylinders and Parking Valves: - Operational and visual inspections for leaks - Fill up with fluid, as required.		X		
28	Fire Extinguisher (if applicable): - Visual inspection of extinguisher and mounting bracket - Visual inspection of safety seal		X		

	Fuselage and Empennage	Ref.	Interval		Initials
			100	Special	
1	Fabric and Finish: - Visual inspection for cracks and deterioration.		X		
2	Fuel Lines: - Visual inspection for security and damage.		X		
3	Fuselage Frame Tubing, Longerons, and Stringers: - Visual inspection for damage and corrosion. - When opening a bay or access cover for other work, inspect all fuselage tubes for damage or corrosion.		X		
4	Rudder, Elevator and Stabilizer Trim Cables, Turnbuckles, Guides, and Pulleys: - Inspect for tension, safety, wear, damage, corrosion, and operation.		X		
5	Stabilizer Yoke and Screw: - Visual inspection for end play, security, and excessive wear.		X		
6	Rudder and Elevator Structures: - Visual inspection for damage.		X		

	Fuselage and Empennage	Ref.	Interval		Initials
			100	Special	
7	Horizontal Stabilizer: - Gently tap the structure to ensure there are no loose objects inside. - Gently flex the outboard, forward joint where the leading edge tube and the outboard rib meet, to inspect for cracks or breaks.	SB00018		Condition Inspect.	
8	Rudder Hinge Pins and Bushings: - Visual inspection for excess wear, and corrosion.		X		
9	Elevator Hinge Pins and Bushings: - Visual inspection for excess wear, and corrosion.		X		
10	Stabilizer Brace Wires: - Visual inspection for corrosion, tightness, and safety. If any single wire is found to be damaged, they must all be replaced.		X		
11	Lubricate per Chapter 6.2		X		

	Wing	Ref.	Interval		Initials
			100	Special	
1	Fabric and Finish: - Visual inspection for cracks and deterioration.		X		
2	Aileron, Flap, and Wing Structure: - Visual inspection for damage.		X		
3	Fuel Tanks, Caps, and Lines: - Visual inspection for damage, leaks and deterioration.		X		
4	Wing Attachment Bolts: - Visual inspection for security.		X		
5	Lift and Jury Struts: - Visual inspection for security.		X		
6	Lift Strut Forks: - Visual inspection for damage and security.		X		
7	Aileron and Flap Cables, Turnbuckles, Guides, and Pulleys: - Visual inspection for safety, damage, corrosion, and operation.		X		
8	Ailerons Attachments and Brackets: - Visual inspection for tightness and damage.		X		

	Fuselage and Empennage	Ref.	Interval		Initials
			100	Special	
9	Aileron Hinge Pins and Blocks: - Visual inspection for excess wear and corrosion.		X		
10	Flap Attachments and Brackets: - Visual inspection for tightness and damage.		X		
11	Flap Crossbar, Control Rod, Spring Pins, and Blocks: - Visual inspection		X		
12	Lubricate per Chapter 6.2		X		

	Landing Gear	Ref.	Interval		Initials
			100	Special	
1	Fabric and Finish: - Visual inspection for cracks and deterioration.		X		
2	Jack Airplane.		X		
3	Gear, Cabane, and Shock Strut Bolts and Nuts: - Visual inspection for safety. - If applicable, refer to AOSS Manuals		X		
4	Shock Absorber and Shock Cords: - Visual inspection for broken bands, threads, and weakness. - If AOSS installed, refer to AOSS information		X		
5	Tires: - Visual inspection for cuts, uneven or excessive wear and slippage.		X		
6	Wheels: - Remove, clean, check, and repack bearings.		X		
7	Main Wheel Tire Pressure: - Check pressure.		X		
8	Brake Lining and Disks: - Visual inspection for excessive wear.		X		
9	Brake Lines: - Visual inspection for chafing and security.		X		
10	Tail Wheel Attachments: - Visual inspection for tightness and safety.		X		
11	Tail Wheel Fork: - Visual inspection for looseness on bracket.		X		
12	Tail Wheel Tire: - Visual inspection for cuts and uneven or excessive wear.		X		

	Landing Gear	Ref.	Interval		Initials
			100	Special	
13	Tail Wheel: - Remove, clean, and visually inspect for damage and corrosion - Functionally check tail wheel swivel lock - Repack bearings (if applicable).		X		
14	Tail Wheel Tire Pressure (applicable to the optional tail wheel only): - Verify pressure.		X		
15	Lubricate per Chapter 6.2		X		

	Return To Service	Ref.	Interval		Initials
			100	Special	
1	Install engine cowling.		X		
2	Install fuselage and empennage access panels.				
3	Install wing access panels.				
4	Verify oil level is full				
5	Perform engine run-up in accordance with operational / functional check: - After completing, perform a walk around to detect fluid leaks or other discrepancies.		X		
6	Verify all Cub Crafters' Safety Alerts, Service Bulletins, and Instructions are complied with.		X		
7	Verify the aircraft's documentation is in order: - Airworthiness Certificate - Registration - Pilot's Operating Handbook and Aircraft Flight Manual - Weight and Balance - Equipment List		X		

	Operational/Functional Inspection Report	Initials	Notes
1	Flight Controls: - Check controls operate in the correct direction - Ensure movement through full range of travel without binding and there is no excessive friction.		
2	Flaps: - Lower flaps to the first, second and third notches - Ensure the notches hold, both upward and downward.		

	Operational/Functional Inspection Report	Initials	Notes
3	Elevator Trim Controls: - Ensure it operates through full range of travel without binding.		
4	Engine Controls: - Ensure movement through full range of travel without binding or cable wear.		
5	Altimeter: - Must indicate within 50 feet of field elevation when set to correct barometric pressure.		
6	Vertical Speed Indicator (VSI): - Must indicate zero.		
7	Battery Master Switch: - Switch on - Verify voltage - Flag on turn coordinator should disappear.		
8	Start engine using procedure in Pilot's Operating Handbook, Section 4.		
9	Set 1700 RPM: - Perform electronic ignition check, should be little or no drop between left and right systems. - No engine roughness.		
10	Pull Carburetor Heat Knob: - Engine RPM should show a slight drop.		
11	Apply a Load to the Electrical System (e.g. switch on landing light): - Observe that voltage remains constant and amperage increases when load is applied (if ammeter installed).		
13	Ignition Battery Backup System (if installed): - Switch key to R position. - Flip "RT IGN BACKUP BATTERY" switch to "EMERGENCY" position. Should have no change to engine performance. - Amber Light should illuminate. - Flip "RT IGN BACKUP BATTERY" switch to "NORMAL" position. - Switch key to BOTH		
14	Check the radio for proper Nav and Com operation.		
15	Check the transponder for proper operation.		
16	Verify proper ELT operation.		
17	Set throttle to idle: - Engine should idle between 500 and 750 RPM.		
18	Set 1000 RPM.		

	Operational/Functional Inspection Report	Initials	Notes
19	Turn engine off by slowly pulling mixture control. **NOTE** An increase in RPM prior to the control reaching idle cut-off position indicates proper air fuel mixture.		

CHAPTER 7

HEAVY MAINTENANCE, REPAIRS, AND ALTERATIONS

INTENTIONALLY LEFT BLANK

7 HEAVY MAINTENANCE, REPAIRS AND ALTERATIONS

7.1 ..... AUTHORIZATION TO PERFORM HEAVY MAINTENANCE, REPAIR, AND ALTERATIONS

7.2 ..... HEAVY MAINTENANCE TASKS

INTENTIONALLY LEFT BLANK

7 HEAVY MAINTENANCE, REPAIRS, AND ALTERATIONS

TABLE OF CONTENTS

7.1. AUTHORIZATION TO PERFORM HEAVY MAINTENANCE, REPAIR, AND ALTERATIONS 2
7.2. HEAVY MAINTENANCE TASKS (Not Authorized at this Time) 2
7.2.1 Removal and Replacement of Components 2
7.2.2 Repair of Components or Aircraft Structure 2
7.2.3 Alterations of Components or Aircraft Structure 2

7.1. AUTHORIZATION TO PERFORM HEAVY MAINTENANCE, REPAIR, AND ALTERATIONS

No heavy maintenance, major repair or alterations, as outlined in ASTM F2483, FAR 43, or in this manual are authorized at this time.

To obtain engineering approvals for any major repairs or alterations, please contact Cub Crafters at:

Cub Crafters, Inc.
1918 South 16th Avenue
Yakima, WA. 98903
Tel: 509-248-9491
support@cubcrafters.com

7.2. HEAVY MAINTENANCE TASKS (Not Authorized at this Time)

7.2.1 Removal and Replacement of Components

7.2.2 Repair of Components or Aircraft Structure

7.2.3 Alterations of Components or Aircraft Structure

CHAPTER 8

OVERHAUL

INTENTIONALLY LEFT BLANK

8 OVERHAUL

8.1 ..... AUTHORIZATION TO PERFORM OVERHAULS
8.2 ..... OVERHAUL MANUAL FOR LSA OR LSA COMPONENT
8.3 ..... COMPONENTS PLANNED FOR OVERHAUL

INTENTIONALLY LEFT BLANK

8 OVERHAUL

TABLE OF CONTENTS

8.1. AUTHORIZATION TO PERFORM OVERHAULS 2
8.2. OVERHAUL MANUAL FOR LSA OR LSA COMPONENTS 3
8.3. COMPONENTS PLANNED FOR OVERHAUL 3
8.1.1 Engine 3
8.1.2 Propeller 3
8.1.3 Carburetor 3
8.1.4 Carburetor Air Box 3
8.1.5 Starters, Generators, and Alternators 3
8.1.6 Instruments 3
8.1.7 Avionics Equipment 3
8.1.8 Oil Cooler 3

8.1. AUTHORIZATION TO PERFORM OVERHAULS

No overhauls as outlined in ASTM F2483, FAR 43, or in this manual are authorized at this time. Overhauls can only be performed by Cub Crafters.

To obtain engineering approvals for any major repairs or alterations, please contact Cub Crafters at:

Cub Crafters, Inc.
1918 South 16th Avenue
Yakima, WA. 98903
Tel: 509-248-9491
support@cubcrafters.com

8.2. OVERHAUL MANUAL FOR LSA OR LSA COMPONENTS

8.3. COMPONENTS PLANNED FOR OVERHAUL

8.1.1 Engine

8.1.2 Propeller

8.1.3 Carburetor

8.1.4 Carburetor Air Box

8.1.5 Starters, Generators, and Alternators

8.1.6 Instruments

8.1.7 Avionics Equipment

8.1.8 Oil Cooler

INTENTIONALLY LEFT BLANK

CHAPTER 9

MAJOR REPAIRS AND ALTERATIONS

INTENTIONALLY LEFT BLANK

9 MAJOR REPAIRS AND ALTERATIONS

9.1 .....ALTERATIONS GENERAL
9.2 .....EVALUATION TO ASTM STANDARD WITH PRODUCTION ACCEPTANCE SPECIFICATIONS
9.3 ..... ALTERATION AFFIDAVIT
9.4 .....WRITTEN INSTRUCTIONS AND DIAGRAMS FOR CERTIFICATION
9.5 .....OWNER INFORMATION ON ALTERATION DOCUMENTATION FOR AIRCRAFT RECORDS

INTENTIONALLY LEFT BLANK

9 MAJOR REPAIRS AND ALTERATIONS

TABLE OF CONTENTS

9.1. ALTERATIONS GENERAL 2
9.2. EVALUATION TO ASTM STANDARD WITH PRODUCTION ACCEPTANCE SPECIFICATIONS 2
9.3. ALTERATION AFFIDAVIT 2
9.4. WRITTEN INSTRUCTIONS AND DIAGRAMS FOR CERTIFICATION 2
9.4.1 Ground and Flight Test Program for Verification of Safe Operation 2
9.5. OWNER INFORMATION ON ALTERATION DOCUMENTATION FOR AIRCRAFT RECORDS 2

9.1. ALTERATIONS GENERAL

No major alterations, as outlined in ASTM F2483, FAR 43, or in this manual are authorized at this time.

To obtain engineering approvals for any major alterations, please contact Cub Crafters at:

Cub Crafters, Inc.
1918 South 16th Avenue
Yakima, WA. 98903
Tel: 509-248-9491
support@cubcrafters.com

9.2. EVALUATION TO ASTM STANDARD WITH PRODUCTION ACCEPTANCE SPECIFICATIONS

9.3. ALTERATION AFFIDAVIT

9.4. WRITTEN INSTRUCTIONS AND DIAGRAMS FOR CERTIFICATION

9.4.1 Ground and Flight Test Program for Verification of Safe Operation

9.5. OWNER INFORMATION ON ALTERATION DOCUMENTATION FOR AIRCRAFT RECORDS

CHAPTER 10

TASK-SPECIFIC TRAINING

INTENTIONALLY LEFT BLANK

10 TASK-SPECIFIC TRAINING

10.1 ..... CARBON CUB SS SPECIFIC TRAINING – GENERAL
10.2 .....TYPE-SPECIFIC TRAINING REQUIRED BY CUB CRAFTERS, INC.

INTENTIONALLY LEFT BLANK

10 TASK-SPECIFIC TRAINING

TABLE OF CONTENTS

10.1 CARBON CUB SS SPECIFIC TRAINING – GENERAL 2
10.2 TYPE SPECIFIC TRAINING REQUIRED BY CUB CRAFTERS, INC. 2
10.1.2 EAA Sport Air Fabric Covering Course 2

10.1 CARBON CUB SS SPECIFIC TRAINING – GENERAL

10.2 TYPE SPECIFIC TRAINING REQUIRED BY CUB CRAFTERS, INC.

10.1.2 EAA Sport Air Fabric Covering Course

CHAPTER 11

SAFETY DIRECTIVES COMPLIANCE

INTENTIONALLY LEFT BLANK

11 SAFETY DIRECTIVES COMPLIANCE

11.1 ..... SAFETY DIRECTIVES FOR CONTINUED AIRWORTHINESS
11.2 ..... TYPES OF SAFETY DIRECTIVES
11.3 ..... MANDATORY SAFETY DIRECTIVES
11.4 ..... OBTAINING LATEST SAFETY OF FLIGHT INFORMATION

INTENTIONALLY LEFT BLANK

11 SAFETY DIRECTIVES

TABLE OF CONTENTS

11.1. SAFETY DIRECTIVES FOR CONTINUED AIRWORTHINESS.....2
11.2. TYPES OF SAFETY DIRECTIVES.....2
11.3. MANDATORY SAFETY DIRECTIVES.....2
11.4. OBTAINING LATEST SAFETY OF FLIGHT INFORMATION.....2

11.1. SAFETY DIRECTIVES FOR CONTINUED AIRWORTHINESS

In the event of an aircraft component failure, defect, or other discrepancy on this aircraft, contact Cub Crafters quality department via postal mail, e-mail, fax, or telephone. If the problem relates to a safety of flight or is a significant service issue, use the form and procedures specified in section 5.2.11 of this manual to initiate corrective action.

Cub Crafters maintains an Operational Safety Monitoring System in accordance with ASTM F2295 through which all continued airworthiness issues are resolved.

11.2. TYPES OF SAFETY DIRECTIVES

When corrective action has been determined to be warranted, Cub Crafters will issue a safety directive to all owner/operators within the current database. These directives will be classified in three different categories:

- SAFETY ALERT – The safety alert is a directive that relates to safety of flight and requires immediate action.
- SERVICE BULLETIN – A service bulletin is a directive which does not require immediate action, however compliance with the directive is strongly recommended.
- NOTIFICATION – A notification will not necessarily recommend any action but is provided as a method of disseminating information relating to the continued airworthiness of the aircraft.

11.3. MANDATORY SAFETY DIRECTIVES

When a safety directive has been issued which requires mandatory action, it is the owner/operator's responsibility to ensure that the directive is fully complied with to allow the continued safe operation of the aircraft. Cub Crafters, Inc. assumes no responsibility for problems arising from non-compliance with such directives.

11.4. OBTAINING LATEST SAFETY OF FLIGHT INFORMATION

To ensure you have the latest safety of flight information, please contact:

Cub Crafters, Inc.
1918 South 16th Avenue
Yakima, WA. 98903-1212

Telephone: 509-248-9491

Email: **support@cubcrafters.com**